Oracle® Data Guard

Broker

11*g* Release 2 (11.2)

E17023-04

October 2010

ORACLE®

Oracle Data Guard Broker, 11*g* Release 2 (11.2)

E17023-04

Copyright © 1999, 2010, Oracle and/or its affiliates. All rights reserved.

Primary Author: Kathy Rich

Contributors: Gary Allison, George Claborn, Sean Connolly, Jay Davison, Ray Dutcher, Mahesh Girkar, Michael Harvey, Nitin Karkhanis, Sadhana Kyathappala, Steve Lee, Jiangbin Luo, Venkat Maddali, Bob McGuirk, Ashish Ray, Vivian Schupmann, Lawrence To, Stephen Vivian, Hongjie Yang

This software and related documentation are provided under a license agreement containing restrictions on use and disclosure and are protected by intellectual property laws. Except as expressly permitted in your license agreement or allowed by law, you may not use, copy, reproduce, translate, broadcast, modify, license, transmit, distribute, exhibit, perform, publish, or display any part, in any form, or by any means. Reverse engineering, disassembly, or decompilation of this software, unless required by law for interoperability, is prohibited.

The information contained herein is subject to change without notice and is not warranted to be error-free. If you find any errors, please report them to us in writing.

If this software or related documentation is delivered to the U.S. Government or anyone licensing it on behalf of the U.S. Government, the following notice is applicable:

U.S. GOVERNMENT RIGHTS Programs, software, databases, and related documentation and technical data delivered to U.S. Government customers are "commercial computer software" or "commercial technical data" pursuant to the applicable Federal Acquisition Regulation and agency-specific supplemental regulations. As such, the use, duplication, disclosure, modification, and adaptation shall be subject to the restrictions and license terms set forth in the applicable Government contract, and, to the extent applicable by the terms of the Government contract, the additional rights set forth in FAR 52.227-19, Commercial Computer Software License (December 2007). Oracle USA, Inc., 500 Oracle Parkway, Redwood City, CA 94065.

This software is developed for general use in a variety of information management applications. It is not developed or intended for use in any inherently dangerous applications, including applications which may create a risk of personal injury. If you use this software in dangerous applications, then you shall be responsible to take all appropriate fail-safe, backup, redundancy, and other measures to ensure the safe use of this software. Oracle Corporation and its affiliates disclaim any liability for any damages caused by use of this software in dangerous applications.

Oracle is a registered trademark of Oracle Corporation and/or its affiliates. Other names may be trademarks of their respective owners.

This software and documentation may provide access to or information on content, products, and services from third parties. Oracle Corporation and its affiliates are not responsible for and expressly disclaim all warranties of any kind with respect to third-party content, products, and services. Oracle Corporation and its affiliates will not be responsible for any loss, costs, or damages incurred due to your access to or use of third-party content, products, or services.

Contents

Preface xv

Audience xv
Documentation Accessibility xv
Related Documents xvi
Conventions xvi

What's New in Oracle Data Guard Broker? xvii

New Features in Oracle Data Guard Broker 11.2 xvii
New Features in Oracle Data Guard Broker 11.1 xviii

1 Oracle Data Guard Broker Concepts

1.1 Overview of Oracle Data Guard and the Broker 1-1
1.1.1 Data Guard Configurations and Broker Configurations 1-1
1.1.2 Oracle Data Guard Broker 1-2
1.2 Benefits of Data Guard Broker 1-3
1.3 Data Guard Broker Management Model 1-6
1.4 Data Guard Broker Components 1-7
1.5 Data Guard Broker User Interfaces 1-8
1.5.1 Oracle Enterprise Manager 1-8
1.5.2 Data Guard Command-Line Interface (DGMGRL) 1-9
1.6 Data Guard Monitor 1-9
1.6.1 Data Guard Monitor (DMON) Process 1-9
1.6.2 Configuration Management 1-10
1.6.3 Database Property Management 1-11

2 Oracle Data Guard Installation

2.1 Oracle Data Guard Installation 2-1
2.2 Prerequisites 2-2

3 Managing Broker Configurations

3.1 Configuration Support 3-1
3.2 Setting Up the Broker Configuration Files 3-3
3.2.1 Renaming the Broker Configuration Files 3-4
3.2.2 Managing Broker Configuration Files in an Oracle RAC Environment 3-5

3.2.2.1 Using Cluster File System (CFS) for Configuration Files ... 3-5
3.2.2.2 Using Oracle ASM Disk Groups for Configuration Files ... 3-6
3.2.2.3 Using Raw Devices for Configuration Files ... 3-6
3.3 Starting the Data Guard Broker ... 3-7
3.4 Management Cycle of a Broker Configuration ... 3-8
3.5 Enable and Disable Operations ... 3-10
3.6 Configuration Status ... 3-11

4 Managing Databases

4.1 Database Objects ... 4-1
4.2 Database States ... 4-1
4.2.1 Database State Transitions ... 4-3
4.3 Database Properties ... 4-4
4.3.1 Monitorable (Read-Only) Properties ... 4-6
4.3.2 Configurable (Changeable) Database Properties ... 4-6
4.4 Managing Redo Transport Services ... 4-7
4.4.1 Setting Up For Redo Transport ... 4-7
4.4.2 Managing Redo Transport Services for Data Protection Modes ... 4-8
4.4.3 Turning Redo Transport Services On and Off ... 4-8
4.4.4 Specifying Locations for Archived Redo Log Files ... 4-9
4.4.5 Other Redo Transport Settings ... 4-10
4.4.6 Redo Transport Services in an Oracle RAC Database Environment ... 4-10
4.4.7 Transport Lag ... 4-11
4.5 Managing Log Apply Services ... 4-11
4.5.1 Managing Delayed Apply ... 4-12
4.5.2 Managing Parallel Apply with Redo Apply ... 4-12
4.5.3 Allocating Resources to SQL Apply ... 4-13
4.5.4 Managing SQL Apply Filtering ... 4-13
4.5.5 Managing SQL Apply Error Handling ... 4-13
4.5.6 Managing the DBA_LOGSTDBY_EVENTS Table ... 4-14
4.5.7 Apply Services in an Oracle RAC Database Environment ... 4-14
4.5.7.1 Selecting the Apply Instance ... 4-14
4.5.7.2 Apply Instance Failover ... 4-15
4.5.8 Apply Lag ... 4-16
4.6 Managing Data Protection Modes ... 4-16
4.6.1 Setting the Protection Mode for Your Configuration ... 4-16
4.6.2 How the Protection Modes Influence Broker Operations ... 4-19
4.6.2.1 Upgrading or Downgrading the Current Protection Mode ... 4-20
4.6.2.2 Switchover Operations ... 4-20
4.6.2.3 Failover Operations ... 4-21
4.6.2.4 Disable and Enable Operations ... 4-21
4.6.2.5 Requirements For Removing a Database from the Configuration ... 4-22
4.6.2.6 Requirements On Other Operations ... 4-22
4.7 Managing Fast-Start Failover ... 4-22
4.7.1 Configure Properties to Tune Fast-Start Failover ... 4-23
4.7.2 Configure Conditions for Fast-start Failover ... 4-24
4.7.3 Application Initiated Fast-Start Failover ... 4-25

4.8 Managing Database Conversions 4-25
4.9 Database Status 4-25

5 Switchover and Failover Operations

5.1 Overview of Switchover and Failover in a Broker Environment 5-1
5.2 Choosing a Target Standby Database 5-2
5.2.1 Choosing a Target Standby Database for Switchover 5-2
5.2.2 Choosing a Target Standby Database for Failover 5-3
5.3 Switchover 5-3
5.3.1 Before You Perform a Switchover Operation 5-4
5.3.2 Starting a Switchover 5-5
5.3.3 How the Broker Performs a Switchover 5-5
5.4 Manual Failover 5-6
5.4.1 Complete and Immediate Manual Failovers 5-7
5.4.2 Performing a Manual Failover Operation 5-8
5.4.2.1 How the Broker Performs a Complete Failover Operation 5-9
5.4.2.2 How the Broker Performs an Immediate Failover Operation 5-10
5.4.3 Reenabling Disabled Databases After a Role Change 5-11
5.4.3.1 How to Reinstate a Database 5-12
5.4.3.2 How to Re-create and Reenable a Disabled Database 5-12
5.5 Fast-Start Failover 5-13
5.5.1 Prerequisites for Enabling Fast-Start Failover 5-15
5.5.2 Enabling Fast-Start Failover 5-16
5.5.2.1 When Fast-Start Failover Is Enabled and the Observer Is Running 5-21
5.5.2.2 Restrictions When Fast-Start Failover is Enabled 5-23
5.5.2.3 Shutting Down the Primary Database When Fast-Start Failover Is Enabled 5-24
5.5.2.4 Performing Manual Role Changes When Fast-Start Failover Is Enabled 5-24
5.5.3 Directing a Fast-Start Failover From an Application 5-24
5.5.4 Viewing Fast-Start Failover Configuration Statistics and Status 5-25
5.5.4.1 V$DATABASE View 5-26
5.5.4.2 V$FS_FAILOVER_STATS View 5-28
5.5.5 Disabling Fast-Start Failover 5-28
5.5.6 Performance Considerations for Fast-Start Failover 5-31
5.5.7 Managing the Observer 5-32
5.5.7.1 Installing and Starting the Observer 5-33
5.5.7.2 Viewing Information About the Observer 5-33
5.5.7.3 What Happens if the Observer Fails? 5-34
5.5.7.4 Stopping the Observer 5-34
5.5.7.5 Moving the Observer to Another Computer 5-35
5.5.7.6 How the Observer Maintains Fast-Start Failover Configuration Information 5-35
5.5.8 Reinstating the Former Primary Database in the Broker Configuration 5-36
5.5.8.1 Requirements 5-36
5.5.8.2 Restrictions on Reinstatement 5-36
5.5.8.3 How the Broker Handles a Failed Reinstatement 5-37
5.5.9 Shutting Down Databases In a Fast-Start Failover Environment 5-37
5.6 Database Client Considerations 5-37
5.6.1 Data Guard Specific FAN and FCF Configuration Requirements 5-38

5.6.1.1 Oracle Net Configuration Requirements 5-38
5.6.1.2 Database Service Configuration Requirements 5-39
5.6.1.3 ONS Configuration Requirements 5-40

6 Scenarios Using the DGMGRL Command-Line Interface

6.1 Prerequisites for Getting Started 6-1
6.2 Scenario 1: Creating a Configuration 6-2
6.3 Scenario 2: Setting Database Properties 6-4
6.4 Scenario 3: Enabling the Configuration and Databases 6-6
6.5 Scenario 4: Setting the Configuration Protection Mode 6-7
6.6 Scenario 5: Enabling Fast-Start Failover and Starting the Observer 6-8
6.7 Scenario 6: Performing Routine Management Tasks 6-11
6.7.1 Changing Properties and States 6-11
6.7.1.1 Alter a Database Property 6-11
6.7.1.2 Alter the State of a Standby Database 6-12
6.7.1.3 Alter the State of a Primary Database 6-12
6.7.2 Disabling the Configuration and Databases 6-12
6.7.2.1 Disable a Configuration 6-12
6.7.2.2 Disable a Standby Database 6-13
6.7.3 Removing the Configuration or a Standby Database 6-13
6.8 Scenario 7: Performing a Switchover Operation 6-15
6.9 Scenario 8: Performing a Manual Failover Operation 6-18
6.10 Scenario 9: Reinstating a Failed Primary Database 6-20
6.11 Scenario 10: Converting a Physical Standby to a Snapshot Standby 6-21
6.12 Scenario 11: Monitoring a Data Guard Configuration 6-22

7 Data Guard Command-Line Interface Reference

7.1 Starting the Data Guard Command-Line Interface 7-1
7.1.1 DGMGRL Optional Parameters 7-1
7.1.2 DGMGRL Command Format and Parameters 7-2
7.1.3 DGMGRL Command Usage Notes 7-4
7.2 Exiting the Data Guard Command-Line Interface 7-5
ADD DATABASE 7-6
CONNECT 7-8
CONVERT DATABASE 7-10
CREATE CONFIGURATION 7-12
DISABLE CONFIGURATION 7-14
DISABLE DATABASE 7-15
DISABLE FAST_START FAILOVER 7-16
DISABLE FAST_START FAILOVER CONDITION 7-17
EDIT CONFIGURATION (Property) 7-18
EDIT CONFIGURATION (Protection Mode) 7-19
EDIT DATABASE (Property) 7-21
EDIT DATABASE (Rename) 7-23
EDIT DATABASE (State) 7-24

EDIT INSTANCE (AUTO PFILE) ... 7-25
EDIT INSTANCE (Property) ... 7-26
ENABLE CONFIGURATION ... 7-28
ENABLE DATABASE ... 7-29
ENABLE FAST_START FAILOVER ... 7-30
ENABLE FAST_START FAILOVER CONDITION ... 7-32
EXIT ... 7-33
FAILOVER ... 7-34
HELP ... 7-37
QUIT ... 7-39
REINSTATE DATABASE ... 7-40
REMOVE CONFIGURATION ... 7-41
REMOVE DATABASE ... 7-43
REMOVE INSTANCE ... 7-45
SHOW CONFIGURATION ... 7-46
SHOW DATABASE ... 7-48
SHOW FAST_START FAILOVER ... 7-51
SHOW INSTANCE ... 7-52
SHUTDOWN ... 7-54
START OBSERVER ... 7-55
STARTUP ... 7-58
STOP OBSERVER ... 7-60
SWITCHOVER ... 7-61

8 Data Guard Broker Properties

8.1 Configuration Properties ... 8-1
8.1.1 BystandersFollowRoleChange ... 8-2
8.1.2 CommunicationTimeout ... 8-2
8.1.3 FastStartFailoverAutoReinstate ... 8-3
8.1.4 FastStartFailoverLagLimit ... 8-3
8.1.5 FastStartFailoverPmyShutdown ... 8-4
8.1.6 FastStartFailoverThreshold ... 8-5
8.1.7 OperationTimeout ... 8-5
8.2 Monitorable (Read-Only) Database Properties ... 8-6
8.2.1 InconsistentLogXptProps (Inconsistent Redo Transport Properties) ... 8-6
8.2.2 InconsistentProperties (Inconsistent Database Properties) ... 8-7
8.2.3 LogXptStatus (Redo Transport Status) ... 8-7
8.2.4 LsbyFailedTxnInfo (Logical Standby Failed Transaction Information) ... 8-8
8.2.5 LsbyParameters (Logical Standby Parameters) ... 8-8
8.2.6 LsbySkipTable (Logical Standby Skip Table) ... 8-8
8.2.7 LsbySkipTxnTable (SQL Apply Skip Transaction Table) ... 8-9
8.2.8 RecvQEntries (Receive Queue Entries) ... 8-9
8.2.9 SendQEntries (Send Queue Entries) ... 8-10
8.2.10 TopWaitEvents ... 8-12

8.3 Configurable Database Properties 8-12
8.3.1 AlternateLocation 8-14
8.3.2 ApplyInstanceTimeout 8-15
8.3.3 ApplyParallel 8-15
8.3.4 ArchiveLagTarget 8-16
8.3.5 Binding 8-16
8.3.6 DbFileNameConvert 8-17
8.3.7 DelayMins 8-18
8.3.8 DGConnectIdentifier 8-19
8.3.9 FastStartFailoverTarget 8-20
8.3.10 LogArchiveFormat 8-21
8.3.11 LogArchiveMaxProcesses 8-21
8.3.12 LogArchiveMinSucceedDest 8-22
8.3.13 LogArchiveTrace 8-22
8.3.14 LogFileNameConvert 8-23
8.3.15 LogShipping 8-24
8.3.16 LogXptMode 8-25
8.3.17 LsbyASkipCfgPr 8-26
8.3.18 LsbyASkipErrorCfgPr 8-26
8.3.19 LsbyASkipTxnCfgPr 8-27
8.3.20 LsbyDSkipCfgPr 8-28
8.3.21 LsbyDSkipErrorCfgPr 8-28
8.3.22 LsbyDSkipTxnCfgPr 8-29
8.3.23 LsbyMaxEventsRecorded 8-30
8.3.24 LsbyMaxSga 8-30
8.3.25 LsbyMaxServers 8-31
8.3.26 LsbyPreserveCommitOrder 8-31
8.3.27 LsbyRecordAppliedDdl 8-32
8.3.28 LsbyRecordSkipDdl 8-32
8.3.29 LsbyRecordSkipErrors 8-33
8.3.30 MaxConnections 8-33
8.3.31 MaxFailure 8-34
8.3.32 NetTimeout 8-35
8.3.33 ObserverConnectIdentifier 8-35
8.3.34 PreferredApplyInstance 8-36
8.3.35 RedoCompression 8-36
8.3.36 ReopenSecs 8-37
8.3.37 SidName 8-37
8.3.38 StandbyArchiveLocation 8-38
8.3.39 StandbyFileManagement 8-39
8.3.40 StaticConnectIdentifier 8-39

9 Troubleshooting Data Guard

9.1 Sources of Diagnostic Information 9-1
9.2 General Problems and Solutions 9-1
9.2.1 ORA-16596: database not part of the Data Guard broker configuration 9-2
9.2.2 Redo Accumulating on the Primary Is Not Sent to Some Standby Databases 9-2

9.2.3 Many Log Files Are Received on a Standby Database But Not Applied 9-2
9.2.4 The Request Timed Out or Enterprise Manager Performance Is Sluggish 9-3
9.2.5 The Primary Database is Flashed Back 9-3
9.3 Troubleshooting Problems During a Switchover Operation 9-4
9.3.1 Failed Switchovers to Physical Standby Databases 9-4
9.3.1.1 Failure to Convert the Original Primary Database 9-4
9.3.1.2 Failure to Convert Target Physical Standby Database 9-5
9.3.1.3 Failure to Open New Primary Database 9-6
9.3.2 Failed Switchovers to Logical Standby Databases 9-6
9.3.2.1 Failure to Convert Original Primary Database 9-6
9.3.2.2 Failure to Convert Target Logical Standby Database 9-7
9.3.3 Additional Problems That May Occur During a Switchover Operation 9-7
9.4 Troubleshooting Problems During a Failover Operation 9-7
9.4.1 Failed Failovers to Physical Standby Databases 9-7
9.4.1.1 Failed Broker Complete Physical Failovers 9-7
9.4.1.2 Failed Broker Immediate Physical Failovers 9-8
9.4.2 Failed Failovers to Logical Standby Databases 9-8
9.5 Troubleshooting Problems with the Observer 9-8
9.5.1 Problems Starting the Observer 9-9
9.5.2 Problems Because the Observer Has Stopped 9-9
9.5.3 Capturing Observer Actions in the Observer Log File 9-10

A Changed and Deprecated Features

A.1 Changed Features A-1
A.1.1 General Features That Changed A-1
A.1.1.1 Changed Features in Release 11.2 ..... A-1
A.1.1.2 Changed Features in Release 11.1 ..... A-1
A.1.1.3 Changed Features in Release 10.2 ..... A-2
A.1.2 Changed Properties A-2
A.1.2.1 Changed Properties in Release 11.2 ..... A-2
A.1.2.2 Changed Properties in Release 11.1 ..... A-3
A.1.2.3 Changed Properties in Release 10.2 ..... A-3
A.1.3 Changed State Names A-4
A.1.4 Changed DGMGRL Features in Release 10.2 ..... A-4
A.2 Deprecated and Obsolete Features A-4
A.2.1 Deprecated and Obsolete Features in Release 11.2 ..... A-5
A.2.2 Deprecated and Obsolete Features in Release 11.1 ..... A-5
A.2.2.1 Deprecated and Obsolete Properties in Release 11.1 ..... A-5
A.2.3 Deprecated and Obsolete Features in Release 10.2 ..... A-5
A.2.3.1 Deprecated and Obsolete Properties in Release 10.2 ..... A-5

B Data Guard Broker Upgrading and Downgrading

B.1 Upgrade from Release 9.2.0 to Release 11.2 ..... B-1
B.2 Upgrade from Release 10.*n* and 11.1 to Release 11.2 ..... B-2
B.3 Downgrade from Release 11.2 ..... B-3

Glossary

Index

List of Examples

4–1 Using the SHOW DATABASE VERBOSE Command to Display Properties..... 4-5
4–2 Turn Off Redo Transport Services to All Standby Databases 4-9
4–3 Turn Off Redo Transport Services to a Specific Standby Database..... 4-9
6–1 Connecting to the Primary Database on the Local System 6-3
6–2 Connecting to the Primary Database on a Remote System..... 6-3
6–3 Altering a Database Property..... 6-11
6–4 Altering a Standby Database State 6-12
6–5 Disabling the Configuration and Primary Database 6-12
6–6 Disabling a Standby Database..... 6-13

List of Figures

1–1 Relationship of Objects Managed by the Data Guard Broker 1-7
1–2 Oracle Data Guard Broker 1-8
1–3 Databases With Broker (DMON) Processes 1-10
3–1 Oracle Data Guard Broker Configuration 3-3
3–2 Broker Configuration Setup in a CFS Area 3-5
3–3 Broker Configuration Setup with Oracle ASM 3-6
3–4 Broker Configuration Setup with Raw Devices 3-7
3–5 Life Cycle of a Broker Configuration and Its Databases 3-8
5–1 Relationship of Primary and Standby Databases and the Observer 5-15
5–2 The Observer in the Fast-Start Failover Environment 5-32

List of Tables

1–1 Configuration Management With and Without the Broker 1-3
4–1 Database States and Descriptions 4-2
4–2 Data Guard Protection Modes and Requirements 4-18
5–1 FS_FAILOVER_STATUS Column of the V$DATABASE View 5-26
5–2 FS_FAILOVER_OBSERVER_PRESENT Column of the V$DATABASE View 5-33
7–1 Summary of DGMGRL Commands 7-3
7–2 Examples of Health Conditions 7-32
8–1 Configurable Properties 8-12
A–1 Changed Properties in Release 11.2 ..... A-3
A–2 Changed Properties in Release 11.1 ..... A-3
A–3 Changed Properties in Release 10.2 ..... A-3
A–4 Database State Name Changes in Release 11.1 ..... A-4
A–5 Deprecated and Obsolete Properties in Release 11.1 ..... A-5
A–6 Deprecated and Obsolete Properties in Release 10.2 ..... A-5

Preface

This document provides information about Oracle Data Guard Broker, a management and monitoring interface that helps you configure, monitor, and control an Oracle Data Guard broker configuration.

Audience

Oracle Data Guard Broker is intended for database administrators (DBAs) and system administrators who want to use the Oracle Data Guard broker to automate many of the tasks involved in configuring and monitoring an Oracle Data Guard configuration.

The discussions herein assume that readers are already familiar with Oracle Data Guard, Oracle Enterprise Manager, Oracle Real Application Clusters, and the network services provided by Oracle Net Services.

Documentation Accessibility

Our goal is to make Oracle products, services, and supporting documentation accessible to all users, including users that are disabled. To that end, our documentation includes features that make information available to users of assistive technology. This documentation is available in HTML format, and contains markup to facilitate access by the disabled community. Accessibility standards will continue to evolve over time, and Oracle is actively engaged with other market-leading technology vendors to address technical obstacles so that our documentation can be accessible to all of our customers. For more information, visit the Oracle Accessibility Program Web site at `http://www.oracle.com/accessibility/`.

Accessibility of Code Examples in Documentation

Screen readers may not always correctly read the code examples in this document. The conventions for writing code require that closing braces should appear on an otherwise empty line; however, some screen readers may not always read a line of text that consists solely of a bracket or brace.

Accessibility of Links to External Web Sites in Documentation

This documentation may contain links to Web sites of other companies or organizations that Oracle does not own or control. Oracle neither evaluates nor makes any representations regarding the accessibility of these Web sites.

Access to Oracle Support

Oracle customers have access to electronic support through My Oracle Support. For information, visit `http://www.oracle.com/support/contact.html` or visit

http://www.oracle.com/accessibility/support.html if you are hearing impaired.

Related Documents

Refer to the following documentation for more information about Oracle Data Guard:

- *Oracle Data Guard Concepts and Administration*.
- Oracle release notes specific to your operating system.
- Oracle installation guide specific to your operating system.
- For more information about managing Oracle Data Guard through Oracle Enterprise Manager, see the online Help available with this graphical user interface. To access the online Help topics, click Help on the menu bar in Enterprise Manager.

Conventions

The following text conventions are used in this document:

Convention	Meaning
boldface	Boldface type indicates graphical user interface elements associated with an action, or terms defined in text or the glossary.
italic	Italic type indicates book titles, emphasis, or placeholder variables for which you supply particular values.
`monospace`	Monospace type indicates commands within a paragraph, URLs, code in examples, text that appears on the screen, or text that you enter.

What's New in Oracle Data Guard Broker?

This preface describes the new features added to Oracle Data Guard broker in Oracle Database 11*g* and provides links to additional information. For information about features that were introduced in earlier releases, refer to the documentation for those releases.

New Features in Oracle Data Guard Broker 11.2

This section describe the new features and enhancements that were added to Oracle Data Guard broker in Oracle Database 11*g* Release 2 (11.2):

- Oracle Data Guard broker is fully integrated with Oracle Real Application Clusters One Node (Oracle RAC One Node).
- A broker configuration can now consist of a primary database and up to 30 standby databases.
- The value of an instance-specific property can be changed for all instances in one command.
- Redo transport compression is no longer limited to compressing redo data only when a redo gap is being resolved. When compression is enabled for a destination, all redo data sent to that destination is compressed.
- Reinstatement of logical bystanders after a physical standby or logical standby failover.
- Reinstatement of bystanders after an immediate failover.
- Reinstatement of the old (original) primary database after an immediate failover.
- Shutting down all instances but one on a target physical standby for role changes is no longer required.
- FAN/ONS (Fast Application Notification/Oracle Notification Services) notification is sent after a failover for databases configured with Oracle Clusterware and for single-instance databases registered with Oracle Restart.
- FAN/AQ (Fast Application Notification/Advanced Queuing) notification is sent after a failover to a logical standby database.
- Improved status and error reporting for the `SHOW CONFIGURATION` and `SHOW DATABASE` commands.
- The `SHOW DATABASE` command displays the apply lag and transport lag of a standby database.

- Integration with Active Data Guard (automatic stop and restart of apply) when an apply instance is opened.
- The broker configuration files can now reside on disks having any sector size (physical block size) up to 4KB.
- Improved hang detection and resolution for broker network communications. In addition, a new configuration property, `CommunicationTimeout`, enables the user to select an appropriate timeout value for their environment.
- New database property, `StaticConnectIdentifier`, which allows the user to specify a static connect identifier that the DGMGRL client will use to start database instances.
- Protection mode upgrades from maximum availability to maximum protection no longer require a restart of the primary database.

  This means that when upgrading from maximum performance mode to maximum protection mode, you can avoid a restart of the primary database by first upgrading to maximum availability. Once in maximum availability mode, you can then upgrade to maximum protection mode.
- Data Recovery Adviser now uses Data Guard to suggest viable repair options for a primary database that cannot be repaired in a timely manner.

New Features in Oracle Data Guard Broker 11.1

This section describe the new features and enhancements that were added to Oracle Data Guard broker in Oracle Database 11*g* Release 1 (11.1):

- Fast-start failover enhancements

  The following features increase the flexibility and manageability of customers' disaster-recovery configurations using Data Guard:

  - Fast-start failover for a configuration operating in maximum performance mode

    Allows fast-start failover to be enabled in a Data Guard broker configuration operating in maximum performance mode. The administrator can choose the maximum amount of data that may be lost if a fast-start failover is initiated.
  - New `DBMS_DG` PL/SQL package

    The `DBMS_DG` PL/SQL package allows applications to notify the observer process to initiate a fast-start failover to the target standby database.
  - Fast-start failover for configurable conditions

    Fast-start failover can be configured to occur when specific database conditions are detected. Certain conditions detectable through the database health-check mechanism and errors raised by the Oracle server (such as ORA errors) may be designated as conditions under which a fast-start failover should occur.
  - After a failover, the observer automatically attempts to reinstate bystander standby databases.

See Also:

- Section 5.5, "Fast-Start Failover"
- The `DBMS_DG` PL/SQL package in *Oracle Database PL/SQL Packages and Types Reference*

- Manageability enhancements

  The following enhancements make it possible to use the Data Guard broker in a wider variety of disaster-recovery configurations:

  – Support for snapshot standby databases

    See Also: The DGMGRL CONVERT DATABASE command on page 7-10

  – Support for Redo Apply on physical standby databases opened for read

  – Improved support for redo transport options. Enables the administrator to specify a connect identifier for Redo Transport Services.

  – Elimination of database downtime when changing the protection mode to and from maximum availability and maximum performance

  – Allow a primary or logical standby database in a Data Guard Broker configuration to be mounted without having to be opened automatically

  – The DGMGRL client `ADD DATABASE` command can import a pre-configured service attribute from a `LOG_ARCHIVE_DEST_`*n* parameter when adding a standby database to the configuration.

  – Simplification of the database states managed by the broker. A primary database can be in either the TRANSPORT-OFF or TRANSPORT-ON state. A standby database can be in either the APPLY-OFF or APPLY-ON state.

- Compression of redo traffic over the network in a Data Guard configuration

  This feature improves the network bandwidth utilization in a Data Guard configuration by compressing archived redo logs as they are transmitted over the network to standby databases, when the log is sent to satisfy a gap at a standby database.

  See Also: Section 8.3.35, "RedoCompression" on page 8-36

- Better integration with the database recovery area because you can now specify `USE_DB_RECOVERY_FILE_DEST` as the value for the `AlternateLocation` and `StandbyArchiveLocation` instance-specific properties.

- New Data Guard command-line interface (DGMGRL) commands include:

  – `CONVERT DATABASE TO [SNAPSHOT | PHYSICAL] STANDBY`

  – `DISABLE FAST_START FAILOVER CONDITION`

  – `ENABLE FAST_START FAILOVER CONDITION`

  – `SHOW FAST_START FAILOVER`

    See Also: Chapter 7, "Data Guard Command-Line Interface Reference"

- New database properties include:

  - `DGConnectIdentifier` (replaces `InitialConnectIdentifier`)
  - `ObserverConnectIdentifier`
  - `RedoCompression`
- New configuration properties include:
  - `FastStartFailoverAutoReinstate`
  - `FastStartFailoverLagLimit`
  - `FastStartFailoverPmyShutdown`
- `The LsbyTxnConsistency` database property has been renamed to `LsbyPreserveCommitOrder`
- New default of `ASYNC` for the `LogXptMode` database property

  See Also: Chapter 8, "Data Guard Broker Properties"

1

Oracle Data Guard Broker Concepts

This chapter describes the Oracle Data Guard broker, its architecture and components, and how it automates the creation, control, and monitoring of a Data Guard configuration. It contains the following topics:

- Overview of Oracle Data Guard and the Broker
- Benefits of Data Guard Broker
- Data Guard Broker Management Model
- Data Guard Broker Components
- Data Guard Broker User Interfaces
- Data Guard Monitor

See *Oracle Data Guard Concepts and Administration* for the definition of a Data Guard configuration and for complete information about Oracle Data Guard concepts and terminology.

1.1 Overview of Oracle Data Guard and the Broker

Oracle Data Guard ensures high availability, data protection, and disaster recovery for enterprise data. Data Guard provides a comprehensive set of services that create, maintain, manage, and monitor one or more standby databases to enable production Oracle databases to survive disasters and data corruptions. Data Guard maintains these standby databases as transactionally consistent copies of the primary database. If the primary database becomes unavailable because of a planned or an unplanned outage, Data Guard can switch any standby database to the production role, thus minimizing the downtime associated with the outage. Data Guard can be used with traditional backup, recovery, and cluster techniques, as well as the Flashback Database feature to provide a high level of data protection and data availability.

1.1.1 Data Guard Configurations and Broker Configurations

A *Data Guard configuration* consists of one primary database and up to thirty standby databases. The databases in a Data Guard configuration are connected by Oracle Net and may be dispersed geographically. There are no restrictions on where the databases are located as long as they can communicate with each other. For example, you can have a standby database on the same system as the primary database, along with two standby databases on another system.

The Data Guard broker logically groups these primary and standby databases into a *broker configuration* that allows the broker to manage and monitor them together as an integrated unit. You can manage a broker configuration using either the Oracle

Enterprise Manager graphical user interface or the Data Guard command-line interface.

1.1.2 Oracle Data Guard Broker

The Oracle Data Guard broker is a distributed management framework that automates and centralizes the creation, maintenance, and monitoring of Data Guard configurations. The following list describes some of the operations the broker automates and simplifies:

- Creating Data Guard configurations that incorporate a primary database, a new or existing (physical, logical, or snapshot) standby database, redo transport services, and log apply services, where any of the databases could be Oracle Real Application Clusters (Oracle RAC) databases.
- Adding additional new or existing (physical, snapshot, logical, Oracle RAC or non-Oracle RAC) standby databases to an existing Data Guard configuration, for a total of one primary database, and from 1 to 30 standby databases in the same configuration.
- Managing an entire Data Guard configuration, including all databases, redo transport services, and log apply services, through a client connection to any database in the configuration.
- Managing the protection mode for the broker configuration.
- Invoking switchover or failover with a single command to initiate and control complex role changes across all databases in the configuration.
- Configuring failover to occur automatically upon loss of the primary database, increasing availability without manual intervention.
- Monitoring the status of the entire configuration, capturing diagnostic information, reporting statistics such as the Redo Apply rate and the redo generation rate, and detecting problems quickly with centralized monitoring, testing, and performance tools.

You can perform all management operations locally or remotely through the broker's easy-to-use interfaces: the Data Guard management pages in Oracle Enterprise Manager, which is the broker's graphical user interface (GUI), and the Data Guard command-line interface called DGMGRL.

These interfaces simplify the configuration and management of a Data Guard configuration. Table 1–1 provides a comparison of configuration management using the broker's interfaces and using SQL*Plus.

Table 1–1 Configuration Management With and Without the Broker

	With the Broker	Without the Broker
General	Provides primary and standby database management as one unified configuration.	You must manage the primary and standby databases separately.
Standby Database Creation	Provides the Enterprise Manager wizards that automate and simplify the steps required to create a configuration with an Oracle database on each site, including creating the standby control file, online redo log files, datafiles, and server parameter files.	You must manually (using RMAN or other tools): ▪ Copy the database files to the standby database system. ▪ Create a control file on the standby database system. ▪ Create server parameter or initialization parameter files on the standby database system. ▪ Copy the primary database password file to the standby database system.
Configuration and Management	Enables you to configure and manage multiple databases from a single location and automatically unifies all of the databases in the broker configuration.	You must manually: ▪ Set up redo transport services and log apply services on each database in the configuration. ▪ Manage the primary database and standby databases individually.
Control	▪ Automatically sets up redo transport services and log apply services. Simplifies management of these services, especially in an Oracle RAC environment. ▪ Simplifies switchovers, failovers, reinstatements, and conversions to and from a snapshot standby database, allowing you to invoke them through a single command. ▪ Automates failover by allowing the broker to determine if failover is necessary and to initiate failover to a specified target standby database, with no need for DBA intervention and with either no loss of data or with a configurable amount of data loss. ▪ Integrates role changes with Oracle Clusterware. ▪ Manageable and monitorable through Enterprise Manager Grid Control	You must manually: ▪ Use multiple SQL statements to manage the database. ▪ Coordinate sequences of multiple commands across multiple database sites to execute switchover and failover operations. ▪ Coordinate sequences of multiple commands to manage services and instances during role transitions.
Monitoring	▪ Provides continuous monitoring of the configuration health, database health, and other runtime parameters. ▪ Provides a unified updated status and detailed reports. ▪ Provides integration with Oracle Enterprise Manager events.	You must manually: ▪ Monitor the status and runtime parameters using fixed views on each database—there is no unified view of status for all of the databases in the configuration. ▪ Provide a custom method for monitoring Oracle Enterprise Manager events.

1.2 Benefits of Data Guard Broker

The broker's interfaces improve usability and centralize management and monitoring of the Data Guard configuration. Available as a feature of the Enterprise Edition and Personal Edition of the Oracle database, the broker is also integrated with the Oracle

database and Oracle Enterprise Manager. These broker attributes result in the following benefits:

Disaster protection: By automating many of the manual tasks required to configure and monitor a Data Guard configuration, the broker enhances the high availability, data protection, and disaster protection capabilities that are inherent in Oracle Data Guard. Access is possible through a client to any system in the Data Guard configuration, eliminating any single point of failure. If the primary database fails, the broker automates the process for any one of the standby databases to replace the primary database and take over production processing. The database availability that Data Guard provides makes it easier to protect your data.

Higher availability and scalability with Oracle Real Application Clusters (Oracle RAC) Databases: While Oracle Data Guard broker enhances disaster protection by maintaining transactionally consistent copies of the primary database, Data Guard, configured with Oracle high availability solutions such as Oracle Real Application Clusters (Oracle RAC) databases, further enhances the availability and scalability of any given copy of that database. The *intrasite* high availability of an Oracle RAC database complements the *intersite* protection that is provided by Data Guard broker.

Consider that you have a cluster system hosting a primary Oracle RAC database comprised of multiple instances sharing access to that database. Further consider that an unplanned failure has occurred. From a Data Guard broker perspective, the primary database remains available as long as at least one instance of the clustered database continues to be available for transporting redo data to the standby databases. Oracle Clusterware manages the availability of instances of an Oracle RAC database. It works to rapidly recover failed instances to keep the primary database available. If Oracle Clusterware is unable to recover a failed instance, the broker continues to run automatically with one less instance. If the last instance of the primary database fails, the broker provides a way to fail over to a specified standby database. If the last instance of the primary database fails, and fast-start failover is enabled, the broker can continue to provide high availability by automatically failing over to a pre-determined standby database.

The broker is integrated with Oracle Clusterware so that database role changes occur smoothly and seamlessly. This is especially apparent in the case of a planned role switchover (for example, when a physical standby database is directed to take over the primary role while the former primary database assumes the role of standby). The broker and Oracle Clusterware work together to temporarily suspend service availability on the primary database, accomplish the actual role change for both databases during which Oracle Clusterware works with the broker to properly restart the instances as necessary on the old primary database, and then start services defined on the new primary database. The broker manages the underlying Data Guard configuration and its database roles while Oracle Clusterware manages service availability that depends upon those roles. Applications that rely on Oracle Clusterware for managing service availability will see only a temporary suspension of service as the role change occurs in the Data Guard configuration.

Note that while Oracle Clusterware helps to maintain the availability of the individual instances of an Oracle RAC database, the broker coordinates actions that maintain one or more physical or logical copies of the database across multiple geographically dispersed locations to provide disaster protection. Together, the broker and Oracle Clusterware provide a strong foundation for Oracle's high-availability architecture.

> **See Also:** *Oracle Real Application Clusters Administration and Deployment Guide* for information about Oracle Clusterware

Automated creation of a Data Guard configuration: The broker helps you to logically define and create a Data Guard configuration consisting of a primary database and (physical or logical, snapshot, Oracle RAC or non-Oracle RAC) standby databases. The broker automatically communicates between the databases in a Data Guard configuration using Oracle Net Services. The databases can be local or remote, connected by a LAN or geographically dispersed over a WAN.

Oracle Enterprise Manager provides a wizard that automates the complex tasks involved in creating a broker configuration, including:

- Adding an existing standby database, or a new standby database created from existing backups taken through Enterprise Manager
- Configuring the standby control file, server parameter file, and datafiles
- Initializing communication with the standby databases
- Creating standby redo log files
- Enabling Flashback Database if you plan to use fast-start failover

Although DGMGRL cannot automatically create a new standby database, you can use DGMGRL commands to configure and monitor an existing standby database, including those created using Enterprise Manager.

Easy configuration of additional standby databases: After you create a Data Guard configuration consisting of a primary and a standby database, you can add up to 29 new or existing, physical, snapshot, or logical standby databases to each Data Guard configuration. Oracle Enterprise Manager provides an Add Standby Database wizard to guide you through the process of adding more databases.

Simplified, centralized, and extended management: You can issue commands to manage many aspects of the broker configuration. These include:

- Simplify the management of all components of the configuration, including the primary and standby databases, redo transport services, and log apply services.
- Coordinate database state transitions and update database properties dynamically with the broker recording the changes in a broker configuration file that includes profiles of all the databases in the configuration. The broker propagates the changes to all databases in the configuration and their server parameter files.
- Simplify the control of the configuration protection modes (to maximize protection, to maximize availability, or to maximize performance).
- Invoke the Enterprise Manager verify operation to ensure that redo transport services and log apply services are configured and functioning properly.

Simplified switchover and failover operations: The broker simplifies switchovers and failovers by allowing you to invoke them using a single key click in Oracle Enterprise Manager or a single command at the DGMGRL command-line interface (referred to in this documentation as *manual* failover). For *lights-out administration*, you can enable fast-start failover to allow the broker to determine if a failover is necessary and to initiate the failover to a pre-specified target standby database automatically, with no need for DBA intervention. Fast-start failover can be configured to occur with no data loss or with a configurable amount of data loss.

Fast-start failover allows you to increase availability with less need for manual intervention, thereby reducing management costs. Manual failover gives you control over exactly when a failover occurs and to which target standby database. Regardless of the method you choose, the broker coordinates the role transition on all databases in

the configuration. Once failover is complete, the broker publishes a Fast Application Notification (FAN) event to notify applications that the new primary is available.

Note that you can use the `DBMS_DG` PL/SQL package to enable an application to initiate a fast-start failover when it encounters specific conditions. See Section 4.7.3 for more information.

Only one command is required to initiate complex role changes for switchover or failover operations across all databases in the configuration. The broker automates switchover and failover to a specified standby database in the broker configuration. Enterprise Manager enables you to select a new primary database from a set of viable standby databases (enabled and running, with normal status). The DGMGRL `SWITCHOVER` and `FAILOVER` commands only require you to specify the target standby database before automatically initiating and completing the many steps in switchover or failover operations across the multiple databases in the configuration.

Built-in monitoring and alert and control mechanisms: The broker provides built-in validation that monitors the *health* of all of the databases in the configuration. While connected to any database in the configuration, you can capture diagnostic information and detect obvious and subtle problems quickly with centralized monitoring, testing, and performance tools. Both Enterprise Manager and DGMGRL retrieve a complete configuration view of the progress of redo transport services on the primary database and the progress of Redo Apply or SQL Apply on the standby database.

The ability to monitor local and remote databases and respond to events is significantly enhanced by the broker's health check mechanism and tight integration with the Oracle Enterprise Manager event management system.

Transparent to application: Use of the broker is possible for any database because the broker works transparently with applications; no application code changes are required to accommodate a configuration that you manage with the broker.

> **See Also:** *Oracle Data Guard Concepts and Administration* for a complete description of the discrete steps that comprise the creation of standby databases and the other monitoring and control operations that have been automated or simplified by the broker

1.3 Data Guard Broker Management Model

The broker simplifies the management of a Data Guard environment by performing operations on the following logical objects:

- Configuration of databases
- A single database

The broker supports one or more Data Guard configurations, each of which includes a profile for the primary database and each standby database. A supported broker configuration consists of:

- A **configuration** object, which is a named collection of database profiles. A database **profile** is a description of a database object including its current state, current status, and properties. The configuration object profiles one primary database and its standby databases that can include a mix of physical, snapshot, and logical standby databases. The databases of a given configuration are typically distributed across multiple host systems.

- **Database** objects, corresponding to primary or standby databases. The broker uses a database object's profile to manage and control the state of a single database on a given system. The database object may be comprised of one or more instance objects if this is an Oracle RAC database.
- **Instance** objects. The broker treats a database as a collection of one or more named instances. The broker automatically discovers the instances and associates them with their database.

Figure 1–1 shows the relationship of these objects.

Figure 1–1 Relationship of Objects Managed by the Data Guard Broker

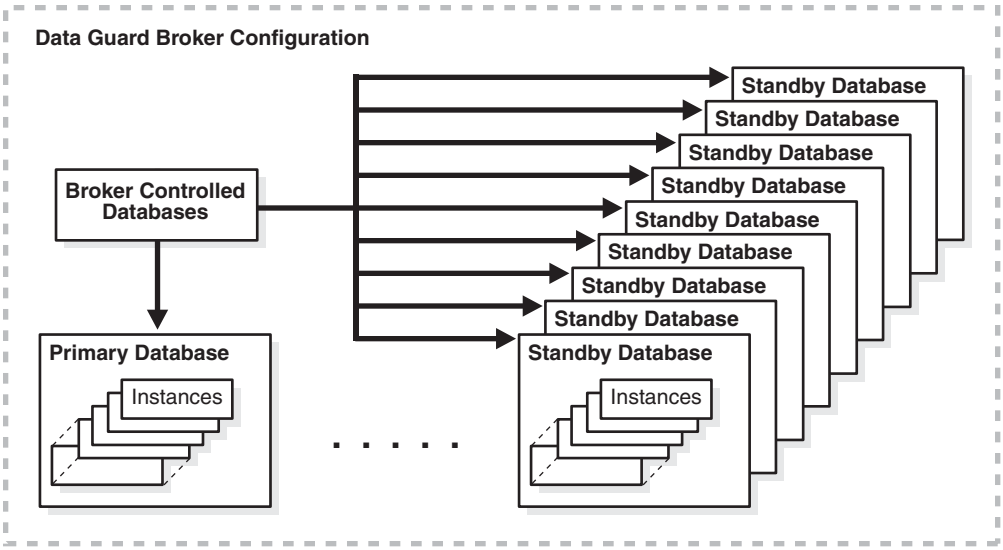

See also: Chapter 3, Chapter 4, and Chapter 5 for more information about managing configuration and database objects

1.4 Data Guard Broker Components

The Oracle Data Guard broker consists of the following components:

- Oracle Enterprise Manager
- Data Guard Command-Line Interface (DGMGRL)
- Data Guard Monitor

Oracle Enterprise Manager and the Data Guard command-line interface (DGMGRL) are the broker client interfaces that help you define and manage a configuration consisting of a collection of primary and standby databases. DGMGRL also includes commands to create an **observer**, a process that facilitates fast-start failover. Section 1.5 describes these interfaces in more detail.

The Data Guard monitor is the broker server-side component that is integrated with the Oracle database. Data Guard monitor is composed of several processes, including the DMON process, and broker configuration files that allow you to control the databases of that configuration, modify their behavior at runtime, monitor the overall health of the configuration, and provide notification of other operational characteristics. Section 1.6 describes the Data Guard monitor in more detail.

Figure 1–2 shows these components of the broker.

Figure 1–2 Oracle Data Guard Broker

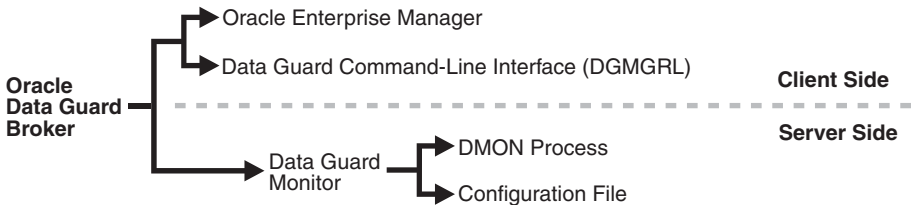

1.5 Data Guard Broker User Interfaces

You can use either of the broker's user interfaces to create a broker configuration and to control and monitor the configuration. The following sections describe the broker's user interfaces:

- Oracle Enterprise Manager
- Data Guard Command-Line Interface (DGMGRL)

1.5.1 Oracle Enterprise Manager

Oracle Enterprise Manager works with the Data Guard monitor to automate and simplify the management of a Data Guard configuration.

With Enterprise Manager, the complex operations of creating and managing standby databases are simplified through Data Guard management pages and wizards, including:

- An Add Standby Database wizard that helps you to create a broker configuration, if one does not already exist, having a primary database and a local or remote standby database. The wizard can create a physical, snapshot, or logical standby database or import an existing physical, snapshot, or logical (Oracle RAC or non-Oracle RAC) standby database. If the wizard creates a physical, snapshot, or logical standby database, the wizard also automates the creation of the standby control file, server parameter file, online and standby redo log files, and the standby datafiles.
- A switchover operation that helps you switch roles between the primary database and a standby database.
- A failover operation that changes one of the standby databases to the role of a primary database.
- Performance tools and graphs that help you monitor and tune redo transport services and log apply services.
- Property pages that allow you to set database properties on any database and, if applicable, the settings are immediately propagated to all other databases and server parameter files in the configuration.
- Event reporting through e-mail.

In addition, it makes all Oracle Net Services configuration changes necessary to support redo transport services and log apply services.

> **See Also:** My Oracle Support note 787461.1 at `http://support.oracle.com` for information about which versions of Enterprise Manager Grid Control are required to manage the full set of Data Guard features in various Oracle Database releases

1.5.2 Data Guard Command-Line Interface (DGMGRL)

The Data Guard command-line interface (DGMGRL) enables you to control and monitor a Data Guard configuration from the DGMGRL prompt or within scripts. You can perform most of the activities required to manage and monitor the databases in the configuration using DGMGRL commands.

DGMGRL also includes commands to create an observer process that continuously monitors the primary and target standby databases and evaluates whether failover is necessary, and then initiates a fast-start failover when conditions warrant.

> **See Also:** Chapter 7 for complete reference information for the Data Guard command-line interface. Table 7–1 provides a summary of DGMGRL commands.

1.6 Data Guard Monitor

The configuration, control, and monitoring functions of the broker are implemented by server-side software and configuration files that are maintained for each database that the broker manages. The software is called the Data Guard monitor.

The following sections describe how the Data Guard monitor interacts with the Oracle database and with remote Data Guard monitors to manage the broker configuration.

1.6.1 Data Guard Monitor (DMON) Process

The Data Guard monitor process (DMON) is an Oracle background process that runs for every database instance that is managed by the broker. When you start the Data Guard broker, a DMON process is created.

> **See Also:** Section 3.3 on page 3-7 for information on starting the broker

Whether you use Oracle Enterprise Manager or DGMGRL to manage a database, the DMON process is the server-side component that interacts with the local database and the DMON processes of the other databases to perform the requested function. The DMON process is also responsible for monitoring the health of the broker configuration and for ensuring that every database has a consistent description of the configuration.

> **See Also:** *Oracle Database Concepts* for more information about the memory structures and processes that are used with an Oracle database

Figure 1–3 shows the broker's DMON process as one of several background processes that constitute an instance of the Oracle database. Each database instance shown in the figure has its own DMON process.

Figure 1–3 Databases With Broker (DMON) Processes

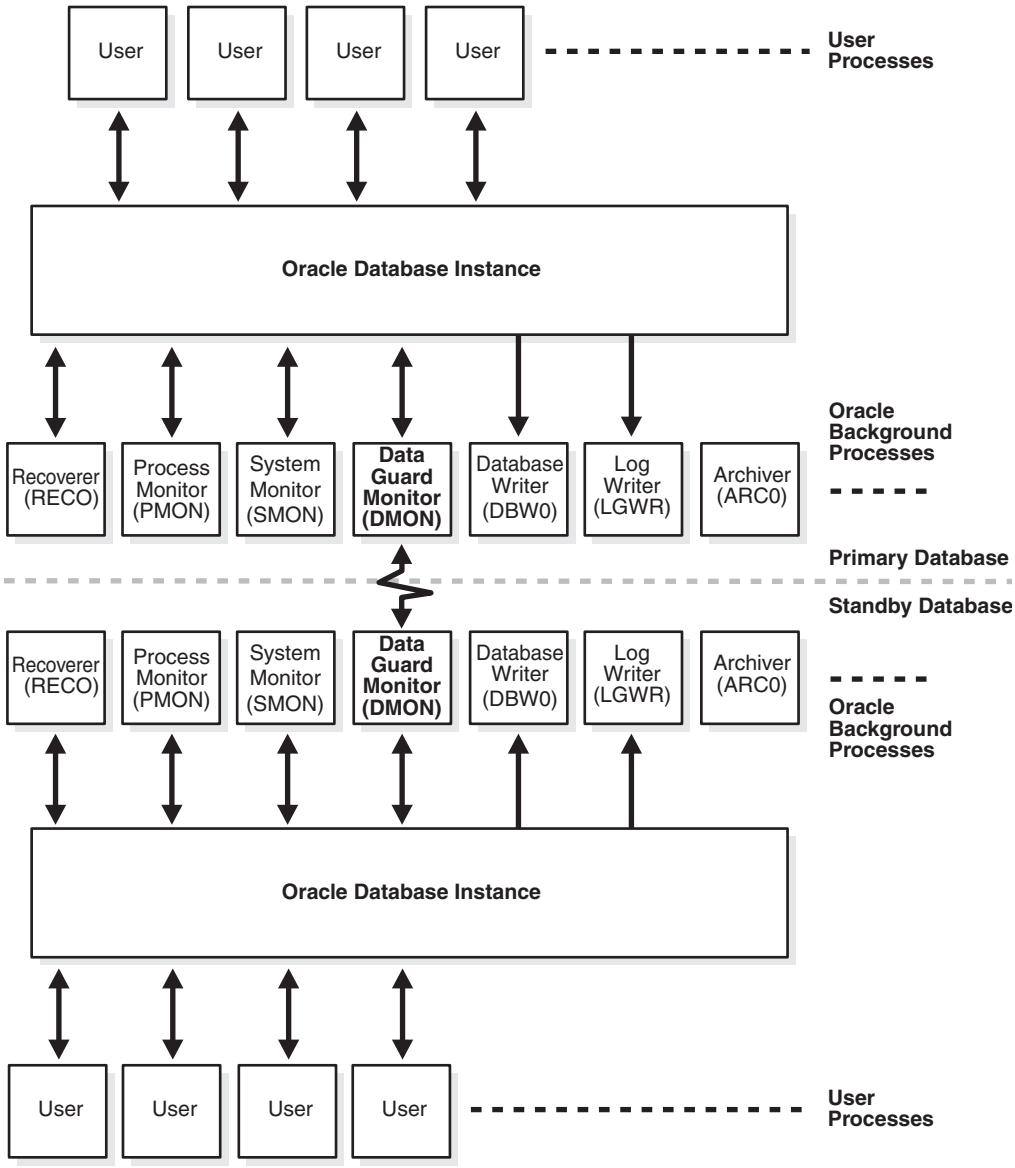

The zigzag arrow in the center of Figure 1–3 represents the two-way Oracle Net Services communication channel that exists between the DMON processes of two databases in the same broker configuration.

This two-way communication channel is used to pass requests between databases and to monitor the health of all of the databases in the broker configuration.

1.6.2 Configuration Management

The broker's DMON process persistently maintains profiles about all database objects in the broker configuration in a binary **configuration file.** A copy of this file is maintained by the DMON process for each of the databases that belong to the broker configuration. If it is an Oracle RAC database, each database's copy of the file is shared by all instances of the database.

This configuration file contains profiles that describe the states and properties of the databases in the configuration. For example, the file records the databases that are part of the configuration, the roles and properties of each of the databases, and the state of each database in the configuration.

The configuration data is managed transparently by the DMON process to ensure that the configuration information is kept consistent across all of the databases. The broker uses the data in the configuration file to configure and start the databases, control each database's behavior, and provide information to DGMGRL and Oracle Enterprise Manager.

See Also: Section 4.3 on page 4-4 for more information

Whenever you add databases to a broker configuration, or make a change to an existing database's properties, each DMON process records the new information in its copy of the configuration file.

1.6.3 Database Property Management

Associated with each database are various properties that the DMON process uses to control the database's behavior. The properties are recorded in the configuration file as a part of the database's object profile that is stored there. Many database properties are used to control database initialization parameters related to the Data Guard environment.

To ensure that the broker can update the values of parameters in both the database itself and in the configuration file, you must use a server parameter file to control static and dynamic initialization parameters. The use of a server parameter file gives the broker a mechanism that allows it to reconcile property values selected by the database administrator (DBA) when using the broker with any related initialization parameter values recorded in the server parameter file.

When you set values for database properties in the broker configuration, the broker records the change in the configuration file and propagates the change to all of the databases in the Data Guard configuration.

Note: The broker supports both the default and nondefault server parameter file filenames. If you use a nondefault server parameter filename, the initialization parameter file must include the complete filename and location of the server parameter file. If this is an Oracle RAC database, there must be one nondefault server parameter file for all instances.

See Also: Section 4.3.2 on page 4-6 for more information

2

Oracle Data Guard Installation

This chapter includes the following topics:

- Oracle Data Guard Installation
- Prerequisites

> **See Also:** Appendix B for help with upgrading to a new release in a Data Guard broker configuration

2.1 Oracle Data Guard Installation

Oracle Data Guard is included with the Enterprise Edition and Personal Edition of the Oracle database software. You can manage a Data Guard configuration by using either SQL*Plus, the Data Guard broker's command-line interface (DGMGRL), or a compatible version of Oracle Enterprise Manager Grid Control.

To use DGMGRL, the best practice is to install the Oracle Enterprise Edition or Personal Edition database software on each location you expect to include in broker configurations. You must install a compatible version of Oracle Enterprise Manager Grid Control to use the Enterprise Manager Web-based user interface for Data Guard.

In addition, to use fast-start failover you must install DGMGRL and run the observer software. Oracle recommends running the observer on a computer system that is separate from the primary and standby systems. To install DGMGRL on the observer computer, use one of the methods described in the following list:

- Install the complete Oracle Client Administrator by choosing the `Administrator` option from Oracle Universal Installer.

  This installation includes DGMGRL but it does not include the Oracle Enterprise Manager agent. This allows you to manage the observer using DGMGRL commands but not Oracle Enterprise Manager. (The Oracle Enterprise Manager agent can be installed separately.)

- Install the full Oracle Database 11*g* software kit.

  This installation includes DGMGRL and the Oracle Enterprise Manager agent, allowing you to manage the observer using Oracle Enterprise Manager or DGMGRL commands.

> **Note:** The observer can be run from any platform that supports it, and that platform can be different from the platform of the primary or target standby database.

2.2 Prerequisites

The following conditions must be met before you can use the broker:

- The primary and standby databases must be using the same version of Oracle Database 11*g* and each can be installed in either a single-instance or multi-instance environment. The database must be licensed for Oracle Enterprise Edition or Personal Edition.
- You must use a server parameter file (SPFILE) to ensure the broker can persistently reconcile values between broker properties and any related initialization parameter values. See Section 4.3.2 for more information.

  If any of the databases in the configuration is an Oracle RAC database, you must configure the server parameter file (SPFILE) appropriately for use in an Oracle RAC environment.

  > **See Also:** *Oracle Real Application Clusters Administration and Deployment Guide* for information about initialization files in an Oracle RAC

- The value of the `DG_BROKER_START` initialization parameter must be set to `TRUE`. See Section 3.3 for more information. (Enterprise Manager sets this parameter automatically.)
- If any of the databases in the configuration is an Oracle RAC database, you must set up the `DG_BROKER_CONFIG_FILE`*n* initialization parameters for that database such that they point to the same shared files for all instances of that database. The shared files could be files on a cluster file system, if available, on raw devices, or stored using Oracle Automatic Storage Management (Oracle ASM).

  > **See Also:** Configuration file information in Section 1.6.2. Also, see Section 3.2 for details about setting up the broker configuration file, and Section 3.2.2.3 for details about sizing the raw devices.

- Oracle Net Services network files must be set up on the primary database and on the standby database if you configure an existing standby database into the broker configuration. Enterprise Manager can assist you in creating the network files when creating a standby database.

  > **See Also:** *Oracle Database Net Services Administrator's Guide*

- In a broker configuration, you use the `DGConnectIdentifer` property to specify a connect identifier for each database. The connect identifier for a database must:
  - Allow all other databases in the configuration to reach it.
  - Allow the database to reach itself.
  - Allow all instances of an Oracle RAC database to be reached.
  - Specify a service that all instances dynamically register with the listeners so that connect-time failover on an Oracle RAC database is possible.
  - Have failover attributes set to allow the primary database's Redo Transport Services to continue shipping redo data to an Oracle RAC standby database, even if the receiving instance of that standby database has failed.

See Also: *Oracle Database Net Services Administrator's Guide* for more information about connect identifiers

- To enable DGMGRL to restart instances during the course of broker operations, a service with a specific name must be statically registered with the local listener of each instance. A static service registration is also required to enable the observer to restart instances as part of automatic reinstatement of the old primary database after a fast-start failover has occurred. The broker uses a default name for the `GLOBAL_DBNAME` attribute of *db_unique_name*`_DGMGRL.`*db_domain*. For example, in the `LISTENER.ORA` file:

```
LISTENER = (DESCRIPTION =
     (ADDRESS_LIST=(ADDRESS=(PROTOCOL=tcp)(HOST=host_name)
     (PORT=port_num))))
SID_LIST_LISTENER=(SID_LIST=(SID_DESC=(SID_NAME=sid_name)
     (GLOBAL_DBNAME=db_unique_name_DGMGRL.db_domain)
     (ORACLE_HOME=oracle_home)))
```

  Alternatively, you can use a different static service name. If you do, be sure to modify the `StaticConnectIdentifier` instance-specific property to reflect the different service name.

  Note: If you will be using the online database relocation capability of Oracle RAC One Node, be sure to statically register a service name for each instance.

- The primary database must be opened in `ARCHIVELOG` mode.
- You must set the `COMPATIBLE` initialization parameter to 10.2.0.1.0 or higher for both the primary and standby databases. However, if you want to take advantage of new Oracle Database 11.2 features, set the `COMPATIBLE` parameter to 11.2.0 on all databases within the Data Guard configuration.

  Ensure the `COMPATIBLE` initialization parameter is set to the same value on both the primary and standby databases. If the values differ, redo transport services may be unable to transmit redo data from the primary database to the standby databases.
- Select and configure a redo transport authentication method, as described in *Oracle Data Guard Concepts and Administration*.

  See Also:

  - Section 3.3 for more information about preparing and starting Oracle Data Guard broker
  - *Oracle Data Guard Concepts and Administration* for more information about setting up network files
  - *Oracle Database Net Services Administrator's Guide*

3

Managing Broker Configurations

This chapter discusses the following topics:

- Configuration Support
- Setting Up the Broker Configuration Files
- Starting the Data Guard Broker
- Management Cycle of a Broker Configuration
- Enable and Disable Operations
- Configuration Status

3.1 Configuration Support

The broker enables you to logically define a Data Guard configuration, consisting of a primary database and one or more standby databases. With the broker, you define a **broker configuration** that is a *logical* grouping of the databases, including redo transport services and log apply services. At the DBA's discretion, the broker controls the logical objects in the configuration, modifies their behavior at runtime, monitors the overall health of the configuration, and reports any health and other operational characteristics up through the Oracle Enterprise Management notification mechanisms if you are using Oracle Enterprise Manager, or through `SHOW` commands if you are using DGMGRL.

The broker supports Data Guard configurations consisting of a primary database, and up to thirty standby databases that are either local to, or, remote from, the primary database. Any of those databases can be an Oracle Real Application Clusters (Oracle RAC) database.

A supported Data Guard configuration contains the following components:

- A primary database (Oracle RAC or non-Oracle RAC)
- From one to thirty physical, snapshot, or logical (Oracle RAC or non-Oracle RAC) standby databases
- Physical systems that host the primary and standby databases
- Oracle Net Services network configuration that defines a connection between the databases
- Standby (archived redo log files) destination parameters and configuration properties
- Redo transport services that transmit the redo data from the primary database to the standby databases

- Log apply services that apply redo data to the standby databases from the archived redo log files or standby redo log files

The Data Guard log apply services update standby databases with redo data that is transmitted automatically from the primary database by redo transport services. The archived redo log files and standby redo log files contain all of the database changes except for *unrecoverable* or *unlogged* changes. On physical standby databases, Redo Apply applies the redo data to keep the standby consistent with the primary database. On logical standby databases, SQL Apply applies the redo data to keep the standby consistent with the primary database. On snapshot standby databases, the redo data is received but not applied until the snapshot standby database is converted back to a physical standby database.

The broker's Data Guard monitor (DMON) process configures and maintains the broker configuration as a group of objects that you can manage and monitor as a single unit. Thus, when you enter a command that affects multiple databases, the DMON process:

- Carries out your request on the primary database
- Coordinates with the DMON process for each of the other databases, as required for your request
- Updates the configuration file on the local system
- Communicates with the DMON process for each of the other databases to update their copies of the configuration file

Through the DMON process, you can configure, monitor, and control the databases and the configuration together as a unit. If you disable the configuration, broker management of all of the databases in the configuration is also disabled. If you later enable the configuration, broker management is enabled for each database in the configuration.

Figure 3–1 shows a broker configuration with a primary database and physical standby database.

On the primary database, the figure shows the redo transport services in addition to the following main components: the primary database, DMON, the online redo log files, and the archived redo log files. The figure also shows standby redo log files in outline form on the primary side; the standby redo logs are outlined to indicate they are currently inactive but have been configured in preparation for a switchover to the standby role.

The physical standby database includes the following components: a standby database, log apply services, DMON, archived redo log files, and standby redo log files. The online redo log files on the physical standby database are outlined to indicate they are currently inactive but have been configured in preparation for a switchover to the primary role.

> **See Also:** *Oracle Data Guard Concepts and Administration* for more information about physical, snapshot, and logical standby databases

Figure 3–1 Oracle Data Guard Broker Configuration

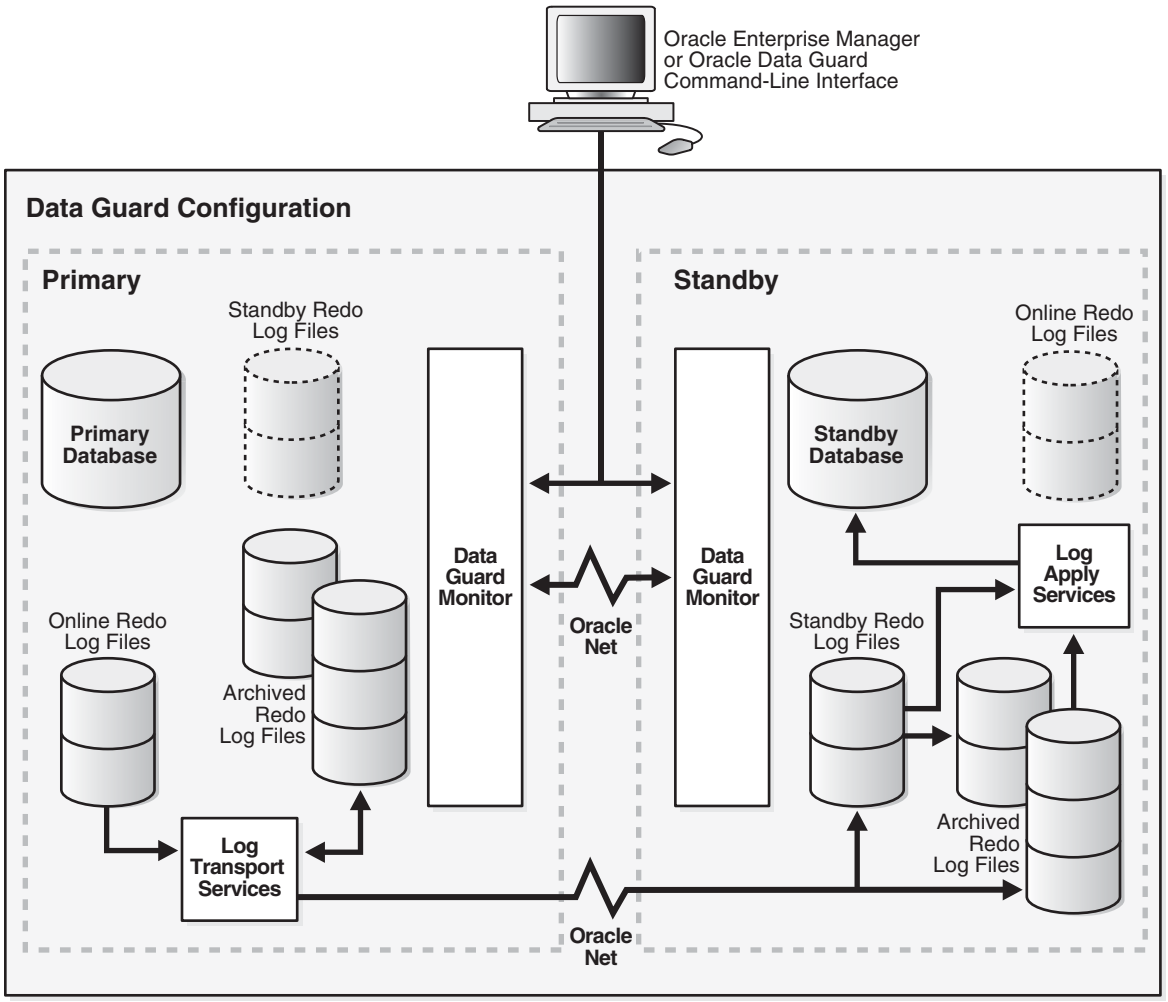

3.2 Setting Up the Broker Configuration Files

Two copies of the configuration file are maintained for each database so as to always have a record of the last known *valid* state of the configuration. When the broker is started for the first time, the configuration files are automatically created and named using a default path name and filename that is operating-system specific. You can override this default path name and filename by setting the following initialization parameters for that database:

```
DG_BROKER_CONFIG_FILE1
DG_BROKER_CONFIG_FILE2
```

Note the following restrictions when setting the `DG_BROKER_CONFIG_FILE1` and `DG_BROKER_CONFIG_FILE2` initialization parameters:

- These parameters can only be set or changed when the Data Guard broker is not running (`DG_BROKER_START=FALSE`).
- These parameters must specify a raw device, Oracle ASM file, or cluster file system file that is shared for all Oracle RAC instances.

The Data Guard Broker works with databases that use either Oracle managed or user managed datafiles. These datafiles can reside on raw devices, a file system or an Oracle ASM disk group. The following section contains these topics:

- Renaming the Broker Configuration Files
- Managing Broker Configuration Files in an Oracle RAC Environment

3.2.1 Renaming the Broker Configuration Files

You can change the configuration filenames dynamically by issuing the `ALTER SYSTEM` SQL statement. However, you cannot alter these parameters when the broker's DMON process is running. To change the names of these configuration files for a given database, perform the following steps:

1. Disable the broker configuration using the DGMGRL `DISABLE` command. See Section 3.5 on page 3-10.
2. Stop the Data Guard broker DMON process using the following SQL statement:

   ```
   SQL> ALTER SYSTEM SET DG_BROKER_START=FALSE;
   ```

3. Change the configuration filenames for the database:

   ```
   SQL> ALTER SYSTEM SET DG_BROKER_CONFIG_FILE1=filespec1;
   SQL> ALTER SYSTEM SET DG_BROKER_CONFIG_FILE2=filespec2;
   ```

   Note: If the broker is managing an Oracle RAC database, the value of `DG_BROKER_CONFIG_FILE1` and the value of `DG_BROKER_CONFIG_FILE2` for each of the instances must point to the same set of physical files.

4. The method of moving the files depends upon where they currently reside and where you want to move them to:
   - If the files reside on an operating file system, use operating system commands to move the files to their new location.
   - If the files reside on raw devices, manually transfer the files to their new location.
   - If the old or new location is an Oracle ASM disk group, use the `DBMS_FILE_TRANSFER.COPY_FILE` function to transfer the files to their new location.
5. Restart the Data Guard broker DMON process, as follows:

   ```
   SQL> ALTER SYSTEM SET DG_BROKER_START=TRUE;
   ```

6. Enable the broker configuration using the DGMGRL `ENABLE` command or the Enable operation in the Data Guard management pages of the Enterprise Manager.

Note: As of Release 11.2, the files can reside on disks having any supported sector size (physical block size) up to and including 4KB sectors. Configuration files that were generated by a release prior to 11.2 are restricted to reside only on disks having the same sector size as was used at the time the files were first created. These files must first be upgraded to Release 11.2 before they can be moved to a location having a different sector size, or are otherwise expected to reside across a mixture of sector sizes in a given broker configuration. See Section B.2 for more information.

3.2.2 Managing Broker Configuration Files in an Oracle RAC Environment

If the broker is managing an Oracle RAC database, the value of `DG_BROKER_CONFIG_FILE1` and the value of `DG_BROKER_CONFIG_FILE2` for each of the instances must point to the same set of physical files. In other words, all instances of the database must reference the same set of configuration files. The configuration files can be deployed using one of the following methods:

- Using Cluster File System (CFS) for Configuration Files
- Using Oracle ASM Disk Groups for Configuration Files
- Using Raw Devices for Configuration Files

3.2.2.1 Using Cluster File System (CFS) for Configuration Files

If cluster file system (CFS) is available, and the configuration files reside there, the `DG_BROKER_CONFIG_FILE`*n* parameters on all of the instances must be set to these files including the path to the CFS area. Figure 3–2 shows the set up for the broker configuration files on CFS. In this scenario, the parameters and value for all instances would be:

```
DG_BROKER_CONFIG_FILE1=$ORACLE_BASE/admin/db_unique_name/dr1db_unique_name.dat
DG_BROKER_CONFIG_FILE2=$ORACLE_BASE/admin/db_unique_name/dr2db_unique_name.dat
```

Figure 3–2 Broker Configuration Setup in a CFS Area

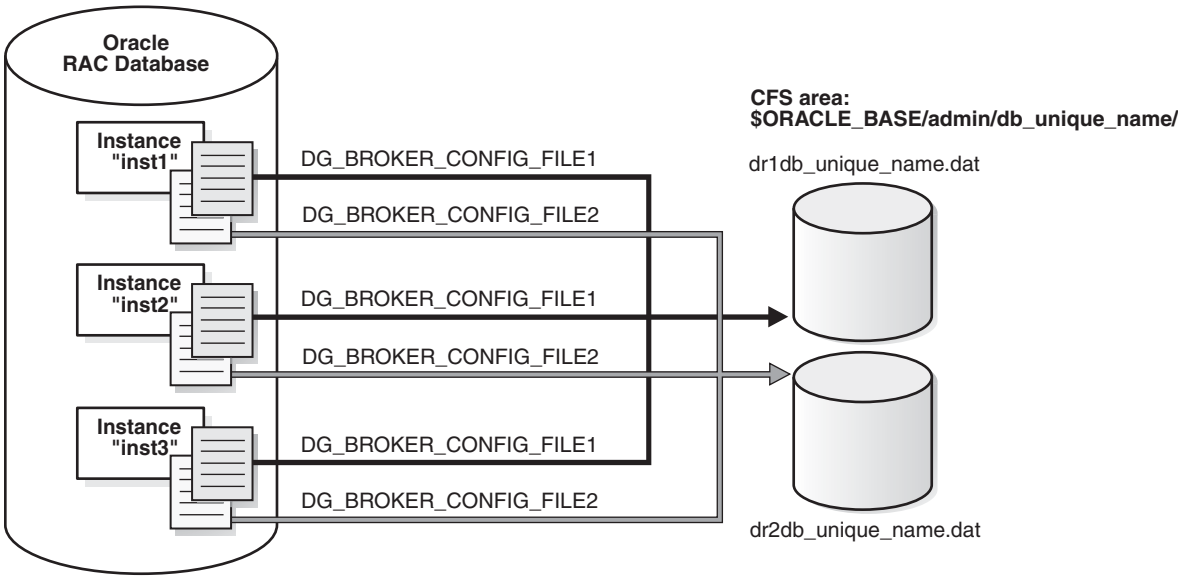

3.2.2.2 Using Oracle ASM Disk Groups for Configuration Files

The broker's configuration files can also reside on an Oracle ASM disk group. Figure 3–3 shows the setup for the broker configuration files on Oracle ASM devices. In this scenario, the parameters and values would be specified, as follows:

```
ALTER SYSTEM SET DG_BROKER_CONFIG_FILE1 = '+DG/DIRECTORY/DR1.DAT' SCOPE=BOTH;
ALTER SYSTEM SET DG_BROKER_CONFIG_FILE2 = '+DG/DIRECTORY/DR2.DAT' SCOPE=BOTH;
```

Figure 3–3 Broker Configuration Setup with Oracle ASM

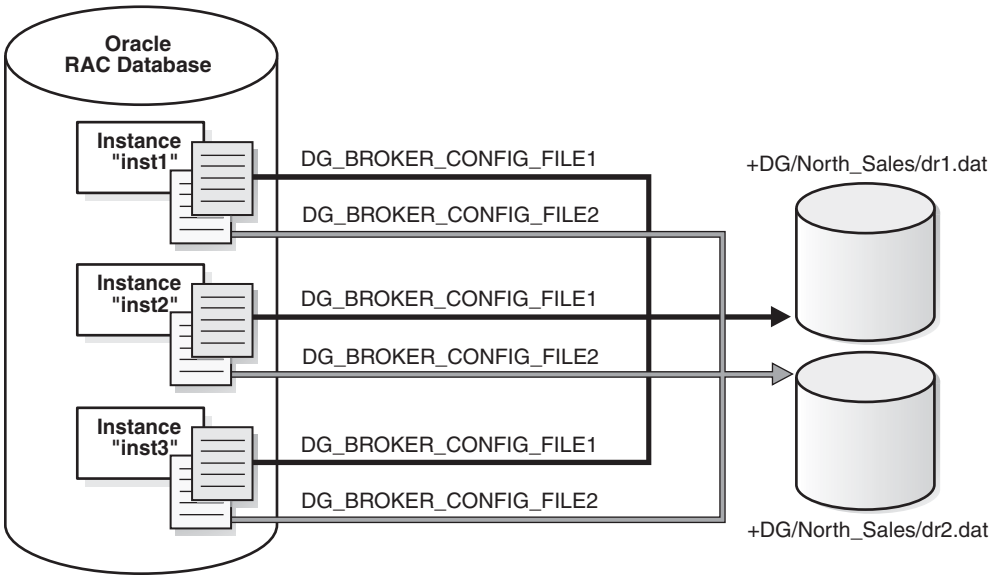

Because the configuration files must be explicitly named by the user, these configuration files are not Oracle Managed Files (OMF).

To create the broker's configuration files on an Oracle ASM disk group, set the `DG_BROKER_CONFIG_FILE1` and `DG_BROKER_CONFIG_FILE2` initialization parameters to a string value that includes the name of an existing Oracle ASM disk group, an existing directory in that disk group, and the name of the configuration file itself.

3.2.2.3 Using Raw Devices for Configuration Files

If CFS is not available and you are not using Oracle ASM, the files must be on raw devices. In this case, the parameter values on each of the instances must point to the raw devices. Figure 3–4 shows the set up for the broker configuration files on raw devices. On a UNIX system, you would set this up similar to the following on each node:

```
% ln -s /dev/rdsk/c1t2d3s5 dr1inst1.dat
% ln -s /dev/rdsk/c1t2d3s6 dr2inst2.dat
```

Figure 3–4 Broker Configuration Setup with Raw Devices

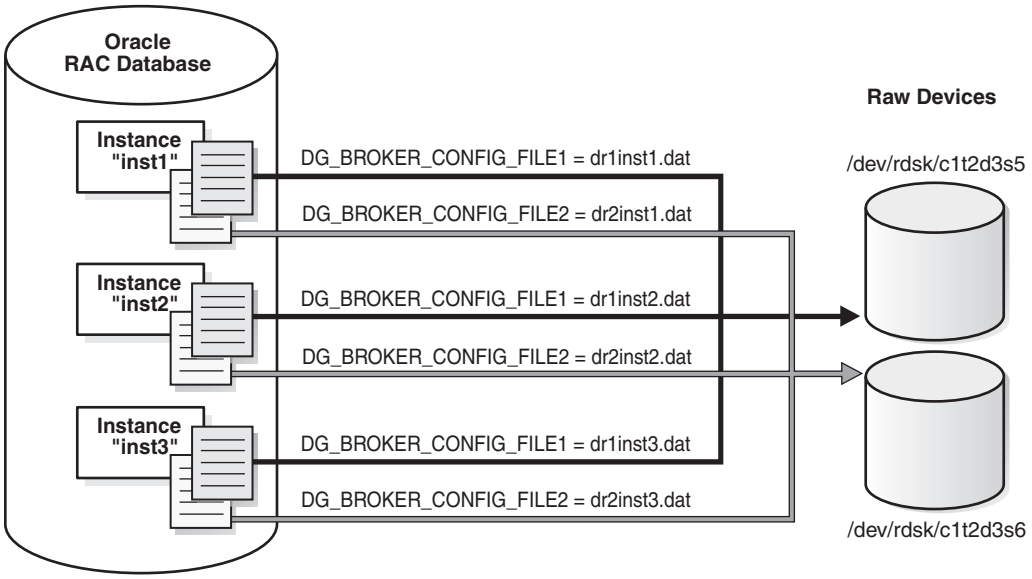

If the broker configuration files need to be on raw devices, set up two additional raw devices of 1MB each. Set up the value of the `DG_BROKER_CONFIG_FILE1` and `DG_BROKER_CONFIG_FILE2` parameters to point to the raw devices. A 1MB configuration file will accommodate 10 databases with a total of 45 instances between them.

You may need a larger device if the number of instances for this configuration exceeds 45 instances. You will need 15KB for each additional instance.

3.3 Starting the Data Guard Broker

After setting up the configuration files, the `DG_BROKER_START` initialization parameter must be set to `TRUE` for each database to start the DMON processes.

By default, the `DG_BROKER_START` initialization parameter is set to `FALSE`. However, you can set the value in the following ways:

- If you are using Oracle Enterprise Manager, it automatically sets the `DG_BROKER_START` initialization parameter to `TRUE` for new standby databases that it creates.
- If you are using DGMGRL, you must explicitly set the `DG_BROKER_START` initialization parameter to `TRUE`; otherwise, the broker will not start. You can set the `DG_BROKER_START` initialization parameter with the following SQL statement:

```
SQL> ALTER SYSTEM SET DG_BROKER_START=TRUE;

System altered.

SQL> SHOW PARAMETER DG_BROKER_START

NAME                TYPE      VALUE
------------------------------------
dg_broker_start     boolean   TRUE
```

Whether you use Enterprise Manager or DGMGRL, set the value of the `DG_BROKER_START` initialization parameter to TRUE in the server parameter file on each primary

and standby database. Doing so ensures that Data Guard Broker will start automatically the next time you start any instance of the database.

3.4 Management Cycle of a Broker Configuration

The broker helps you to create a new configuration or manage an existing configuration. Figure 3–5 shows the life cycle of a broker configuration.

Figure 3–5 Life Cycle of a Broker Configuration and Its Databases

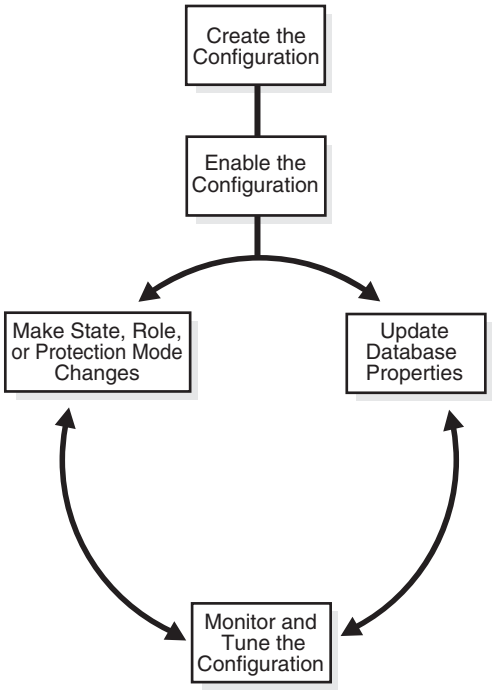

Create the Broker Configuration

When using Enterprise Manager, the Add Standby Database wizard can either add an existing (Oracle RAC or non-Oracle RAC) standby database into the configuration or create a new (Oracle RAC or non-Oracle RAC) standby database and add it to the configuration. The standby database can be a physical, logical, or snapshot database.

When using DGMGRL, the primary database and a standby database must already exist. You construct the standby database from backups of the primary database control files and datafiles, and then prepare it for recovery.

Enable the Broker Configuration

A Data Guard configuration must be enabled to be managed or monitored by the broker. Conversely, you disable a configuration if you no longer want to manage it with the broker. When you disable a configuration, broker management of all of its databases is also disabled.

Note: You can enable or disable the configuration using DGMGRL. You cannot disable the configuration using Enterprise Manager. You can enable the configuration using Enterprise Manager in the event that it was previously disabled using DGMGRL.

A broker configuration, when first created using Enterprise Manager, is automatically enabled as soon as the Add Standby Database wizard completes.

A broker configuration, when first created using DGMGRL, is in a disabled condition. This means its constituent databases are not yet under active control of the broker. When you finish configuring the databases into a broker configuration with DGMGRL, you must enable the configuration to allow the broker to manage the configuration.

You can enable:

- The entire configuration, including all of its databases
- An individual standby database

You can easily disable a database if a problem occurs such that it cannot function properly in a broker configuration. Note that you cannot disable the primary database. You must disable the entire configuration to disable the primary database.

You may also want to disable a configuration temporarily, and then change some properties in the broker configuration without affecting the actual database properties. The changed properties will take effect when the configuration is enabled again for management by the broker.

Make Role Changes Within the Broker Configuration, As Needed

At any time, you can issue a single command to change the roles of the databases in the configuration. If some event renders the primary database unusable, you can fail over one of the standby databases to become the new primary database.

If Flashback Database was enabled, then after failover has completed, you can reinstate the former primary database as a standby database for the new primary database.

In addition, planned downtime for maintenance can be reduced because you can quickly switch over production processing from the current primary database to a standby database, and then switch back again after the planned maintenance.

See Also: Chapter 5 for more information about role changes

Convert to Snapshot Standby Database

At any time, you can issue a single command to convert a physical standby database to a snapshot standby database. The snapshot standby database is a fully updatable database that receives redo data generated from the primary database, but does not apply it.

Once you are done using the snapshot standby database, you can again issue a single command to convert it to a physical standby database. After the conversion to a physical standby has completed, Redo Apply services will start (assuming the state is `APPLY-ON`) and apply all of the accumulated redo data.

Make State Changes to the Databases, As Needed

When you enable a configuration for the first time, the broker, by default, starts redo transport services on the primary and starts log apply services on the standby (except for a snapshot standby).

At any time, you can issue a single command through Enterprise Manager or DGMGRL to change the state of the database. For example, you could bring the primary database into a `TRANSPORT-OFF` state to temporarily stop sending redo data to the standby databases. Then, you could issue another command to resume sending redo data to the standby databases.

> **See Also:** Chapter 4 for more information about database state changes

Update Database Properties, As Needed

The broker enables you to set database properties, some of which correspond to database initialization parameters. You can change these properties to dynamically control such things as redo transport, standby file management, log apply, and to support the overall configuration protection mode. The broker records the changes in the broker configuration file for each database in the Data Guard configuration and propagates the changes to the related initialization parameters in the server parameter files, if needed.

> **See Also:** Chapter 4 and Chapter 8 for complete information about database properties

Set Data Protection Modes, As Needed

The broker enables you to set the data protection mode for the configuration. You can configure the protection mode to maximize data protection, maximize availability, or maximize performance.

> **See Also:** Section 4.6 for information about managing data protection modes

Monitor the Configuration

You can check the health of the configuration, display and update the properties of the databases, and set Oracle Enterprise Manager events.

Enterprise Manager also provides a dynamic performance page that automatically and dynamically refreshes chart data and status at specified intervals. The performance chart shows a graphical summary of how far behind and how much redo data is being generated and applied.

3.5 Enable and Disable Operations

A key concept of management with the broker is the notion of enabling and disabling broker management of the databases in a broker configuration. The enable and disable operations are defined for databases that were incorporated into a broker configuration; you cannot perform these broker operations on databases that are not part of the broker configuration. This is because when you enable or disable a database in the broker configuration, you are effectively enabling or disabling the ability of the broker to:

- Manage and monitor the specified database
- Manage the profile information in the broker configuration file for each database

However, disabling a broker configuration does not affect current services and operations in the actual Data Guard configuration. For example, when you disable a broker configuration, redo transport services and log apply services in the Data Guard configuration continue to function unchanged, but you can no longer manage them through the broker interfaces.

In addition, disabling a database *does not* remove or delete its profile from the broker configuration file. You can still change the properties of a disabled database and later reenable your ability to manage with the broker using the DGMGRL `ENABLE CONFIGURATION` or `ENABLE DATABASE` commands, or the Enable option in the Data Guard management pages of Enterprise Manager.

Caution: If you disable broker management of a standby database in the broker configuration, that standby database cannot be used by the broker as a failover target in the event of loss of the primary database.

Disabling broker management of the configuration may be useful to do even though you are removing the broker's ability to monitor and control the databases. For example, it may be advantageous to disable a configuration temporarily in order to change one or more properties in the broker configuration all at the same time. When you change properties in a disabled configuration, it does not affect the actual database properties underneath because the changes are not applied to the running database until you reenable the configuration. For example, you might want to change the overall configuration protection mode and the redo transport services properties on a disabled configuration so that all changes are applied to the configuration at the same time upon the next enable operation.

See Also: Section 4.6.2, "How the Protection Modes Influence Broker Operations"

3.6 Configuration Status

A configuration status reveals the overall health of the configuration. Status of the configuration is acquired from the status of all of its databases.

The following list describes the possible status modes for a configuration:

- Success

  The configuration, including all of the databases configured in it, is operating as specified by the user without any warnings or errors.

- Warning

  One or more of the databases in the configuration are not operating as specified by the user. To obtain more information, use the DGMGRL `SHOW DATABASE <db-unique-name>` command or the Enterprise Manager display to locate each database and examine its status to reveal the source of the problem.

- Error

  One or more of the databases in the configuration failed or may no longer be operating as specified by the user. To obtain more information, use the DGMGRL `SHOW DATABASE <db-unique-name>` command or the Enterprise Manager display to locate each database and examine its status to reveal the source of the problem.

- Unknown/Disabled

  Broker management of the configuration is disabled and the broker is not monitoring the status of the databases in the configuration.

4

Managing Databases

This chapter describes managing the states and properties that pertain to the database. It contains the following topics:

- Database Objects
- Database States
- Database Properties
- Managing Redo Transport Services
- Managing Log Apply Services
- Managing Data Protection Modes
- Managing Fast-Start Failover
- Managing Database Conversions
- Database Status

4.1 Database Objects

The broker manages database objects. A database object corresponds to a primary or standby database. The broker uses each object's profile to manage and monitor the state of a single database.

The broker distinguishes between physical, snapshot, and logical standby databases. These databases are configured with profiles having states and properties that are appropriate for their standby types.

4.2 Database States

When a configuration is enabled, its databases can be in one of several states that direct the behavior of Data Guard, for example transmitting redo data or applying redo data. Table 4–1 describes the various database states.

Table 4–1 Database States and Descriptions

Database Role	State Name	Description
Primary	`TRANSPORT-ON`	Redo transport services are set up to transmit redo data to the standby databases when the primary database is open for read/write access. If this is an Oracle RAC database, all instances open in read/write mode will have redo transport services running. This is the default state for a primary database when it is enabled for the first time.
Primary	`TRANSPORT-OFF`	Redo transport services are stopped on the primary database. If this is an Oracle RAC database, redo transport services are not running on any instances.
Physical standby	`APPLY-ON`	Redo Apply is started on a physical standby database. If the standby database is an Oracle RAC database, the broker starts Redo Apply on exactly one standby instance, called the apply instance. If this instance fails, the broker automatically chooses another instance that is either mounted or open read-only. This new instance then becomes the apply instance. This is the default state for a physical standby database when it is enabled for the first time. If a license for the Oracle Active Data Guard option has been purchased, a physical standby database can be open while Redo Apply is active. This capability is known as real-time query. See *Oracle Data Guard Concepts and Administration* for more details.
Physical standby	`APPLY-OFF`	Redo Apply is stopped. If this is an Oracle RAC database, there is no instance running Apply Services until you change the database state to `APPLY-ON`.
Snapshot standby	`APPLY-OFF`	Redo data is received from the primary database but is not applied. The database is opened for read/write access.
Logical standby	`APPLY-ON`	SQL Apply is started on the logical standby database when it is opened and the logical standby database guard is on. If this is an Oracle RAC database, SQL Apply is running on one instance, the apply instance. If this instance fails, the broker automatically chooses another open instance. This new instance becomes the apply instance. This is the default state for a logical standby database when it is enabled for the first time.
Logical standby	`APPLY-OFF`	SQL Apply is stopped. The logical standby database guard is on. If this is an Oracle RAC database, there is no instance running SQL Apply until you change the state to `APPLY-ON`.

4.2.1 Database State Transitions

You can use the DGMGRL `EDIT DATABASE` command to explicitly change the state of a database. For example, the `EDIT DATABASE` command in the following example changes the state of the `North_Sales` database to `TRANSPORT-OFF`.

```
DGMGRL> EDIT DATABASE 'North_Sales' SET STATE='TRANSPORT-OFF';
Succeeded.
```

> **See Also:** Chapter 7 for complete information about the `EDIT DATABASE` command.

The following sections describe in more detail the possible state transitions for primary and standby databases.

Primary database state transitions

When transitioning the primary database to the `TRANSPORT-ON` state, the broker sets up redo transport services to all broker-managed standby databases using the redo transport-related properties of the standby databases (see Section 4.4 for the list of all redo transport-related properties). Redo transport services setup is done by setting the `LOG_ARCHIVE_DEST_`*n* and `LOG_ARCHIVE_DEST_STATE_`*n* initialization parameters on the primary database, and the `LOG_ARCHIVE_CONFIG` initialization parameter on all databases (primary or standby). If necessary, the broker also sets up the data protection mode of the database to match the protection mode recorded in the broker configuration file. Finally, if the database is open, the broker switches a log for each thread to initiate redo transport services.

When transitioning the primary database to the `TRANSPORT-OFF` state, the broker turns off redo transport services to all broker-managed standby databases by resetting the `LOG_ARCHIVE_DEST_STATE_`*n* initialization parameter. Transmission of redo data to all broker-managed standby databases is stopped. Log files continue to be archived at the primary database.

If the primary database is an Oracle RAC database, the broker configures redo transport services on all primary instances with the exact same settings.

> **See Also:** Section 4.4 for more details on managing redo transport services

Physical standby database state transitions

When transitioning a physical standby database to the APPLY-ON state, the broker starts Redo Apply with options specified by the Redo Apply-related properties (see Section 4.5 for the property list). If the standby database is an Oracle RAC database, the broker starts Redo Apply on one standby instance, called the apply instance.

If a license for the Oracle Active Data Guard option has been purchased, a physical standby database can be open while Redo Apply is active. This capability is known as real-time query. See *Oracle Data Guard Concepts and Administration* for more details.

> **Note:** The apply instance must be open before starting Redo Apply if any other instance is open.

When transitioning to the APPLY-OFF state, the broker stops Redo Apply.

Note: If you perform online database relocation with Oracle RAC One Node on a physical standby, then the new instance is started in the same mode as the currently running instance. Therefore, if the database is mounted on the original instance, then the database will be mounted on the new instance. Likewise, if the database is open on the original instance, then the database will be open on the new instance. This may result in the new instance starting in a mode that does not match the start option recorded with Oracle Clusterware for the database.

Snapshot standby database state transitions

A snapshot standby database in a broker configuration is in the `APPLY-OFF` state. Apply services cannot be turned on for a snapshot standby database.

Logical standby database state transitions

When transitioning a logical standby database to the `APPLY-ON` state, the broker will wait until the database is open, and then enable the database guard to prevent modifications to tables in the logical standby database, and start SQL Apply with options specified by the log apply-related properties. If the logical standby database is an Oracle RAC database, the broker starts SQL Apply on one standby instance, the apply instance.

When transitioning to the `APPLY-OFF` state, the broker stops SQL Apply.

See Also:

- Section 4.5 on page 4-11 for information about managing SQL Apply
- *Oracle Data Guard Concepts and Administration* for information about the database guard

4.3 Database Properties

There are two types of database properties: monitorable and configurable. Both monitorable and configurable properties can be further divided into properties having database-wide scope or instance-specific scope.

- Monitorable property values can be viewed only when the associated database object is enabled.

  Monitorable properties allow you to view run-time information related to database objects, but you cannot change the values of these properties.

- Configurable property values can be viewed and dynamically updated.

  Configurable properties affect the operation or configuration of the broker. You can change the value of these properties using DGMGRL or Enterprise Manager. You can edit properties if the configuration and its databases are enabled or disabled. However, if the database is disabled, the new property value will not take effect until you enable the configuration or database, as appropriate.

See Also: Chapter 8 for a detailed list of all database properties

To see these properties, you can use the DGMGRL `SHOW` command or Edit Properties page in Enterprise Manager. Example 4–1 uses the `SHOW DATABASE VERBOSE` command to display information about the `North_Sales` database.

Example 4–1 Using the SHOW DATABASE VERBOSE Command to Display Properties

```
DGMGRL> SHOW DATABASE VERBOSE 'North_Sales';

Database - North_Sales

  Role:            PRIMARY
  Intended State:  TRANSPORT-ON
  Instance(s):
    north_sales1

  Properties:
    DGConnectIdentifier             = 'North_Sales.example.com'
    ObserverConnectIdentifier       = ''
    LogXptMode                      = 'sync'
    DelayMins                       = '0'
    Binding                         = 'optional'
    MaxFailure                      = '0'
    MaxConnections                  = '1'
    ReopenSecs                      = '300'
    NetTimeout                      = '30'
    RedoCompression                 = 'DISABLE'
    LogShipping                     = 'ON'
    PreferredApplyInstance          = ''
    ApplyInstanceTimeout            = '0'
    ApplyParallel                   = 'AUTO'
    StandbyFileManagement           = 'AUTO'
    ArchiveLagTarget                = '0'
    LogArchiveMaxProcesses          = '5'
    LogArchiveMinSucceedDest        = '1'
    DbFileNameConvert               = 'dbs/bt, dbs/t'
    LogFileNameConvert              = 'dbs/bt, dbs/t'
    FastStartFailoverTarget         = 'South_Sales'
    InconsistentProperties          = '(monitor)'
    InconsistentLogXptProps         = '(monitor)'
    SendQEntries                    = '(monitor)'
    LogXptStatus                    = '(monitor)'
    RecvQEntries                    = '(monitor)'
    SidName                         = 'north_sales1'
    StaticConnectIdentifier         =
 '(DESCRIPTION=(ADDRESS=(PROTOCOL=tcp)(HOST=North_Sales.example.com)
(PORT=2840))(CONNECT_DATA=(SERVICE_NAME=North_Sales_DGMGRL.example.com)
(INSTANCE_NAME=north_sales1)(SERVER=DEDICATED)))'
    StandbyArchiveLocation          = 'USE_DB_RECOVERY_FILE_DEST'
    AlternateLocation               = ''
    LogArchiveTrace                 = '255'
    LogArchiveFormat                = 'db1r_%d_%t_%s_%R.arc'
    LatestLog                       = '(monitor)'
    TopWaitEvents                   = '(monitor)'

Database Status:
SUCCESS
```

See Also: Chapter 7 for complete information about the DGMGRL command-line interface

4.3.1 Monitorable (Read-Only) Properties

Monitorable database properties allow you to view information related to the database, but you cannot change the values of these properties. These properties can be very helpful when you are trying to diagnose problems in the broker configuration. For example, you can view the `InconsistentLogXptProps` monitorable database property to determine where there is a discrepancy in redo transport services properties between the broker configuration file and the actual value currently used by the database.

You can list all monitorable database properties using the DGMGRL `SHOW DATABASE VERBOSE` command. Use the `SHOW DATABASE` command to obtain more details about a particular property. For example, the following shows the `InconsistentLogXptProps` property:

```
DGMGRL> SHOW DATABASE 'North_Sales' 'InconsistentLogXptProps';

INCONSISTENT LOG TRANSPORT PROPERTIES

 INSTANCE_NAME     STANDBY_NAME  PROPERTY_NAME  MEMORY_VALUE  BROKER_VALUE
  south_sales1      South_Sales     ReopenSecs           600           300
```

Enterprise Manager displays the information obtained from these properties on the Edit Properties page.

4.3.2 Configurable (Changeable) Database Properties

Configurable database properties affect the operation or configuration of the database. When you use DGMGRL or Enterprise Manager to create a primary database object and import existing standby databases into a new broker configuration, the property values are initially imported from the database settings.

You can update many property values when the database is either disabled or enabled. When a new database is added into the configuration, the broker connects to the database and imports initial values for the database properties from the current database settings. For example:

```
DGMGRL> SHOW DATABASE 'North_Sales' 'ArchiveLagTarget';
  ArchiveLagTarget = '0'

DGMGRL> EDIT DATABASE 'North_Sales' SET PROPERTY 'ArchiveLagTarget'=1200;
  Property "ArchiveLagTarget" updated

DGMGRL> SHOW DATABASE 'North_Sales' 'ArchiveLagTarget';
  ArchiveLagTarget = '1200'
```

When the configuration is enabled, the broker keeps the database property values in the broker configuration file consistent with the values being used in the database. For those that are related to initialization parameter properties, the broker maintains the consistency among the value in the broker configuration file, the current database value, and the initialization parameter value in the server parameter file, as follows:

- For dynamic parameters, the broker keeps the value of the database parameter consistent in the system global area (SGA) for the instance, in the broker configuration file, and in the server parameter file.
- For static parameters and properties, the database parameter value in the system global area (SGA) for the instances may temporarily differ from what is in the broker configuration file and in the server parameter file. Typically, the database value becomes the same as the server parameter file value and the broker

configuration file value the next time the database instance is stopped and restarted.

Even when the configuration is disabled, you can update database property values through the broker. The broker retains the property settings (without validating the values) and updates the database initialization parameters in the server parameter file and the settings in memory the next time you enable the broker configuration.

Note: Even though you can change a property value when the configuration is disabled, the change does not take effect on the database unless the configuration is enabled. Also note that some property values can only be changed in the disabled state.

4.4 Managing Redo Transport Services

To manage redo transport services, you specify the following set of configurable database properties on each standby database:

- `DGConnectIdentifier`
- `AlternateLocation`
- `Binding`
- `LogShipping`
- `LogXptMode`
- `MaxConnections`
- `MaxFailure`
- `NetTimeout`
- `RedoCompression`
- `ReopenSecs`
- `StandbyArchiveLocation`

You can use these properties to specify how the broker configures redo transport services for the standby database. The actual redo transport setup, such as setting the `LOG_ARCHIVE_DEST_`*n* initialization parameter, is carried out by the broker on the primary database (except for the `StandbyArchiveLocation` property). If changing the property requires that you change the `LOG_ARCHIVE_DEST_`*n* initialization parameter attributes, the broker forces a log switch on each thread so that the new setting is adopted immediately by the primary database.

You should also preset these properties on the primary database in preparation for it to be switched over to a standby database.

4.4.1 Setting Up For Redo Transport

Redo data is transported to a standby database using Oracle Net. An Oracle Net service name is specified with the `SERVICE` attribute of the `LOG_ARCHIVE_DEST_n` initialization parameter and is used to transmit redo data to the standby database. The Oracle Net service name is translated into a connect descriptor that contains the information necessary for connecting to the standby database.

The `SERVICE` attribute can be set or changed by using the `DGConnectIdentifier` database property. The `DGConnectIdentifier` property is set when a database is first added to the configuration. Its initial value is the connect identifier that is

specified in the optional CONNECT IDENTIFIER IS clause of the ADD DATABASE command. If that optional clause is not specified, the initial value of the DGConnectIdentifier property is extracted from the SERVICE attribute of the LOG_ARCHIVE_DEST_n initialization parameter whose DB_UNIQUE_NAME attribute matches the DB_UNIQUE_NAME of the database specified in the ADD DATABASE command.

The DGConnectIdentifier property value is also used to set up the FAL_SERVER initialization parameter. If the DGConnectIdentifier property for any database is changed, the SERVICE attribute of the corresponding LOG_ARCHIVE_DEST_n initialization parameter will also be changed. In addition, the FAL_SERVER initialization parameter will also be updated on every enabled standby database in the configuration.

4.4.2 Managing Redo Transport Services for Data Protection Modes

Section 4.6 describes how the broker handles data protection modes. As a part of the overall configuration protection mode, you must ensure that redo transport services are also properly set up for the data protection mode that you choose.

You use the LogXptMode database property to set the SYNC or ASYNC mode for redo transport services. See Table 4–2 for additional information about protection modes and redo transport services.

The values for the LogXptMode property are described in the following list:

SYNC

Configures redo transport services for this standby database using the SYNC and AFFIRM attributes of the LOG_ARCHIVE_DEST_*n* initialization parameter. This mode, along with standby redo log files, is required for configurations operating in either maximum protection mode or maximum availability mode. This redo transport service enables the highest grade of data protection to the primary database, but also can incur a higher performance impact.

ASYNC

Configures redo transport services for this standby database using the ASYNC and NOAFFIRM attributes of the LOG_ARCHIVE_DEST_*n* initialization parameter. This mode, along with standby redo log files, enables a moderate grade of protection to the primary database, and lower performance impact.

4.4.3 Turning Redo Transport Services On and Off

Turn redo transport services on and off by setting the state of the primary database. Setting the primary database state to TRANSPORT-ON starts redo transport services to the standby databases, and setting the primary database state to TRANSPORT-OFF stops redo transport services to all the standby database.

> **Note:** Oracle does not recommend turning off redo transport services to all standby databases. This increases the risk of data loss if the primary database fails.

Turn redo transport services on and off to an individual standby database using the LogShipping database property on the standby database. The LogShipping property accepts values ON and OFF. If you set the LogShipping property to OFF for a standby database, redo transport services to this standby database are turned off,

while redo transport services to other databases are not affected. You can set `LogShipping` to `ON` to turn back on redo transport services to the standby database.

The relationship between setting the primary database state and setting the `LogShipping` property is as follows:

- If the primary database state is set to `TRANSPORT-OFF`, redo transport services to all the standby databases are stopped regardless of the `LogShipping` property values of the individual standby databases.
- If the primary database state is set to `TRANSPORT-ON`, redo transport services to each standby database are determined by the `LogShipping` property of that database.

Example 4–2 and Example 4–3 show how to turn off redo transport services in two different scenarios.

Example 4–2 Turn Off Redo Transport Services to All Standby Databases

```
DGMGRL> EDIT DATABASE 'North_Sales' SET STATE='TRANSPORT-OFF';
DGMGRL> SHOW DATABASE 'North_Sales';

Database - North_Sales

  Role:            PRIMARY
  Intended State:  TRANSPORT-OFF
  Instance(s):
    north_sales1

Database Status:
SUCCESS
```

Example 4–3 Turn Off Redo Transport Services to a Specific Standby Database

```
DGMGRL> EDIT DATABASE 'South_Sales' SET PROPERTY 'LogShipping'='OFF';
Property "LogShipping" updated

DGMGRL> SHOW DATABASE 'South_Sales' 'LogShipping';
  LogShipping = 'OFF'
```

4.4.4 Specifying Locations for Archived Redo Log Files

You can set up locations on the standby database to store the archived redo log files to be used by log apply services on the standby database. This is done by setting the `StandbyArchiveLocation` and `AlternateLocation` database properties on the standby database.

`StandbyArchiveLocation` specifies a standby location where the archived redo log files will be stored. The broker only manages the location to store archived redo log files received from the primary database. For archived redo log files generated locally when the database is either the primary database or a logical standby database, you need to set up local destinations directly through the `LOG_ARCHIVE_DEST_`*n* initialization parameter. The broker allows the value of `StandbyArchiveLocation` to be the same as the location you set up for locally generated logs, in which case the broker sets up the `VALID_FOR` attribute of the destination appropriately so that it can be used for both the archived redo log files received from the primary database and archived redo log files generated locally.

Note: On a logical standby database, Oracle recommends that the `LOCATION` attribute of the `LOG_ARCHIVE_DEST_n` initialization parameter for the local destination be different from the value of either the `StandbyArchiveLocation` or `AlternateLocation` property unless you are using a database recovery area.

You can also set up an alternate location to store archived redo log files on the standby using the `AlternateLocation` property on the standby database. This is useful for avoiding disk capacity problems or disk errors when archiving the online redo log files on the standby database. `AlternateLocation` specifies a standby location where the archived redo log files will be stored if the location specified by the `StandbyArchiveLocation` fails. The broker sets up the alternate location properly using the `ALTERNATE` attribute of the `LOG_ARCHIVE_DEST_n` initialization parameter.

Note: You can use the database recovery area to store archived redo log files on the standby. In such a case, the value of the `StandbyArchiveLocation` or `AlternateLocation` properties can be set to `USE_DB_RECOVERY_FILE_DEST`.

4.4.5 Other Redo Transport Settings

You can use the `Binding`, `MaxFailure`, `MaxConnections`, `NetTimeout`, `RedoCompression`, and `ReopenSecs` database properties to tune the performance of redo transport services and to set up redo transport services failure policies. These properties correspond to attributes on the `LOG_ARCHIVE_DEST_n` initialization parameter.

When creating a new standby database, the broker sets these properties with default values. When importing an existing standby database, the broker imports existing settings corresponding to these properties if it finds a match between the service string of a current destination and the connect identifier that was specified when the database was added to the configuration. If that fails, it finds a match between the `db_unique_name` of a current destination and the name that was specified when the database was added to the configuration.

For most cases, the default values or the imported values should be sufficient for normal operations. If for some reason you need to change these property values, you can use DGMGRL commands to set up these properties. Enterprise Manager does not provide an interface for modifying these properties.

See Also: Chapter 8 for complete information about these database properties

4.4.6 Redo Transport Services in an Oracle RAC Database Environment

If the primary database is an Oracle RAC database, the broker ensures that redo transport services are set up identically on each of the primary database instances. Each instance has the same remote destinations, and for each remote destination, all instances are set up the same in terms of redo transport service, performance related settings, and so on. If an instance has different settings, the broker raises a health check warning on that particular instance

Settings relative to redo transport services are saved in the broker configuration file as properties. When you update a redo transport-related property on a standby database,

the corresponding change is also made automatically by the broker to the LOG_ARCHIVE_DEST_*n* initialization parameter on all of the primary database instances. If a new instance comes up on the primary database, the broker sets up redo transport services for the new instance using the redo transport-related properties of all the standby databases currently being managed by the broker. After the new instance is opened for activity, all archived redo log files generated on this instance will begin to transmit to the standby databases.

> **See also:** *Oracle Data Guard Concepts and Administration* for additional information about the LOG_ARCHIVE_DEST_*n* initialization parameter

4.4.7 Transport Lag

Transport lag is a measure of the degree to which the transport of redo to the standby database lags behind the generation of redo on the primary database.

If there are one or more redo gaps on the standby database, the transport lag is calculated as if no redo has been received after the beginning of the earliest redo gap.

Both Enterprise Manager and the DGMGRL client display the redo transport lag for each managed standby database. Enterprise Manager displays the transport lag on the Data Guard home page. The DGMGRL client displays the transport lag in the SHOW DATABASE output for a standby database. There is no transport lag displayed for a primary database. For example:

```
DGMGRL> show database 'South_Sales';
Database - South_Sales
  Role:            PHYSICAL STANDBY
  Intended State:  APPLY-ON
  Transport Lag:   0 seconds
  Apply Lag:       0 seconds
  Real Time Query: OFF
  Instance(s):
  south_sales1

Database Status:
SUCCESS
```

The transport lag can help you identify any problems that may exist with the redo transport services.

4.5 Managing Log Apply Services

You can manage Redo Apply and SQL Apply on physical and logical standby databases through the following log apply-related database properties:

- Properties common to Redo Apply and SQL Apply
  - ApplyInstanceTimeout
  - DelayMins
  - PreferredApplyInstance
- Properties specific to Redo Apply
  - ApplyParallel
- Properties specific to SQL Apply
  - LsbyASkipTxnCfgPr

- LsbyDSkipTxnCfgPr
- LsbyASkipCfgPr
- LsbyDSkipCfgPr
- LsbyASkipErrorCfgPr
- LsbyDSkipErrorCfgPr
- LsbyMaxEventsRecorded
- LsbyPreserveCommitOrder
- LsbyRecordSkipErrors
- LsbyRecordSkipDdl
- LsbyRecordAppliedDdl
- LsbyMaxSga
- LsbyMaxServers

There are some properties related to SQL Apply that, if changed, may require a restart of SQL Apply if the current database state is APPLY-ON. See the information in Chapter 8 about properties related to SQL Apply, to determine which ones require SQL Apply to be restarted.

If the current database state is APPLY-OFF, the property changes will take effect the next time the database state is changed to APPLY-ON.

4.5.1 Managing Delayed Apply

You can set up Apply Services so that the application of redo to the standby database is delayed. This allows the standby database to lag behind the primary database, and if a user error (for example, dropping a table) occurs during this window of time, the standby database will still contain the correct data that can be transmitted back to the primary database to repair the data.

By default, no delay is configured and the redo data is applied on a standby database as soon as possible. If the standby database has standby redo logs configured, the broker will enable real-time apply. When Redo Apply and SQL Apply apply redo in real time, the redo data is recovered directly from the standby redo log files as they are being filled. This means that the standby database does not have to wait for the log files to be archived before applying redo data from the archived redo log files. This minimizes the transactional lag between the primary and the standby.

Use the DelayMins database property to specify the number of minutes that log apply services must wait before applying redo data to the standby database. Note that only log apply services on the standby database are delayed. Redo transport services on the primary database are not delayed, thus the primary database data is still well protected by the standby database.

Caution: Because the broker automatically enables real-time apply on standby databases, Oracle recommends that you configure all databases to use Flashback Database.

4.5.2 Managing Parallel Apply with Redo Apply

For Redo Apply, you can configure whether multiple parallel processes are used to apply redo data received from the primary database by using the ApplyParallel

database property. Parallelism is enabled by default, which means Redo Apply automatically chooses the optimal number of parallel processes based on the number of CPUs in the system. (This is equivalent to setting the `ApplyParallel` property to `AUTO`.) You can disable parallelism by setting the `ApplyParallel` property to `NO`.

Note: The `ApplyParallel` database property is not displayed on the Edit Properties page of Enterprise Manager.

See Also: The `ApplyParallel` property in Section 8.3.3, "ApplyParallel"

4.5.3 Allocating Resources to SQL Apply

You can control how much SGA memory is available for SQL Apply. This can be set using the `LsbyMaxSga` database property.

To control the number of parallel query servers used by SQL Apply, you can use the `LsbyMaxServers` database property.

You can control the trade off between SQL Apply performance and the commit order of transactions. The `LsbyPreserveCommitOrder` database property controls whether transactions are committed on the logical standby database in the exact same order in which they were committed on the primary database. Preserving commit order may affect performance.

See Also: Section 8.3.24, "LsbyMaxSga" and Section 8.3.25, "LsbyMaxServers"

4.5.4 Managing SQL Apply Filtering

One of the benefits of a logical standby database is to allow control of what to apply and what not to apply. This is done by setting up SQL Apply filters. The granularity of the filtering ranges from a specific transaction to database objects to a particular class of SQL statement on a particular schema.

To add a SQL Apply filter in Data Guard broker, use the `LsbyASkip*` database properties (for example, `LsbyASkipTxnCfgPr` or `LsbyASkipCfgPr`). To delete a previously added SQL Apply filter, use the `LsbyDSkip*` database properties (for example, `LsbyDSkipTxnCfgPr` or `LsbyDSkipCfgPr`).

See Also: Chapter 8 for information on these properties

4.5.5 Managing SQL Apply Error Handling

You can fine-tune SQL Apply to handle apply errors on a specified set of SQL statements on particular schemas. When such SQL Apply errors are encountered, Data Guard can either skip the error to continue SQL Apply or call a specified stored procedure at the time when the error is encountered.

To add this error handling capability, use the `LsbyASkipErrorCfgPr` database property. To delete a previously added error handling specification, use the `LsbyDSkipErrorCfgPr` database property.

Changing these properties results in restarting SQL Apply if the current database state is `APPLY-ON`. If the current database state is `APPLY-OFF`, the property changes take effect the next time the database state is changed to `APPLY-ON`.

4.5.6 Managing the DBA_LOGSTDBY_EVENTS Table

The DBA_LOGSTDBY_EVENTS table records important events that affect SQL Apply. Because every logical standby database might have a different interest in the set of events to be recorded in this table, Data Guard provides a means to control the event recording. From the Data Guard broker, you can use the LsbyRecord* database properties (for example, LsbyRecordSkipDdl or LsbyRecordSkipErrors) to control recording of a particular set of events. The value of these properties are either TRUE or FALSE, indicating the turning on or off of the event recording.

4.5.7 Apply Services in an Oracle RAC Database Environment

If a standby database is an Oracle RAC database, only one instance of the Oracle RAC database can have log apply services running at any time. This instance is called the **apply instance**. If the apply instance fails, the broker automatically moves log apply services to a different instance; this is called **apply instance failover**.

4.5.7.1 Selecting the Apply Instance

Note: The information in this section is not applicable to snapshot standby databases.

If you have no preference which instance is to be the apply instance in an Oracle RAC standby database, the broker randomly picks an apply instance. If you want to select a particular instance as the apply instance, there are two methods to do this.

- The first method is to pick an apply instance before there is an apply instance running in the Oracle RAC standby database. To do so, set the value of the PreferredApplyInstance database property to the name of the instance (see the SidName property) you prefer to be the apply instance. The broker starts log apply services on the instance specified by the PreferredApplyInstance property when no apply instance is yet selected in the Oracle RAC standby database. This could be the case before you enable the standby database for the first time, or if the apply instance just failed and the broker is about to do an apply instance failover, or if the Oracle RAC database is currently the primary and you want to specify its apply instance in preparation for a switchover. Once the apply instance is selected and, as long as the apply instance is still running, the broker disregards the value of the PreferredApplyInstance property even if you change it.
- The second method is to change the apply instance when the apply instance is already selected and is running. To change the apply instance, issue the DGMGRL SET STATE command to set the standby database state to APPLY-ON, with a specific apply instance argument. The SET STATE command will update the PreferredApplyInstance property to the new apply instance value, and then move log apply services to the new instance. For example, use DGMGRL SHOW command to show the available instances for the standby database, then issue the EDIT DATABASE command to move log apply services to the new instance:

```
DGMGRL> SHOW DATABASE 'South_Sales'

Database - South_Sales

  Role:            PHYSICAL STANDBY
  Intended State:  APPLY-ON
  Transport Lag:   0 seconds
```

```
  Apply Lag:       0 seconds
  Real Time Query: OFF
  Instance(s):
    south_sales1 (apply instance)
    south_sales2

Database Status:
SUCCESS

DGMGRL> EDIT DATABASE 'South_Sales' SET STATE='APPLY-ON' WITH APPLY
INSTANCE='south_sales2';
Succeeded.

DGMGRL> SHOW DATABASE 'South_Sales' 'PreferredApplyInstance';
  PreferredApplyInstance = 'south_sales2'

DGMGRL> SHOW DATABASE 'South_Sales'

Database - South_Sales

  Role:            PHYSICAL STANDBY
  Intended State:  APPLY-ON
  Transport Lag:   0 seconds
  Apply Lag:       0 seconds
  Real Time Query: OFF
  Instance(s):
    south_sales1
    south_sales2 (apply instance)

Database Status:
SUCCESS
```

Ensure that the new apply instance is running when the command is issued. Otherwise, the apply instance remains the same.

Once the apply instance is selected, the broker keeps apply instance information in the broker configuration file so that even if the standby database is shut down and restarted, the broker still selects the same instance to start log apply services. The apply instance remains unchanged until changed by the user or it fails for any reason and the broker decides to do an apply instance failover.

4.5.7.2 Apply Instance Failover

To tolerate a failure of the apply instance, the broker leverages the availability of the Oracle RAC standby database by automatically failing over log apply services to a different standby instance. The apply instance failover capability provided by the broker enhances data protection.

To set up apply instance failover, set the `ApplyInstanceTimeout` database property to specify the time period that the broker will wait after detecting an apply instance failure and before initiating an apply instance failover. To select an appropriate timeout value, you need to consider:

- If there is another mechanism in the cluster that will try to recover the failed apply instance.
- How long your business can tolerate not applying redo data on the standby database.
- The overhead associated with moving the log apply services to a different instance. The overhead may include retransmitting, from the primary database, all

log files accumulated on the failed apply instance that have not been applied if those log files are not saved in a shared file system that can be accessed from other standby instances.

The broker default value of the `ApplyInstanceTimeout` property is 0 seconds, indicating that apply instance failover should occur immediately upon detection of the failure of the current apply instance.

After the broker initiates an apply instance failover, the broker selects a new apply instance according to the following rule: if the `PreferredApplyInstance` property indicates an instance that is currently running, select it as the new apply instance; otherwise pick a random instance that is currently running to be the new apply instance.

4.5.8 Apply Lag

Apply lag is a measure of the degree to which the data in a standby database lags behind the data in the primary database, due to delays in propagating and applying redo to the standby database.

Both Enterprise Manager and the DGMGRL client display the apply lag for each managed standby database. Enterprise Manager displays the apply lag on the Data Guard home page. The DGMGRL client displays the apply lag in the `SHOW DATABASE` output for a standby database. There is no apply lag displayed for a primary database. For example:

```
DGMGRL> show database 'South_Sales';
Database - South_Sales
  Role:            PHYSICAL STANDBY
  Intended State:  APPLY-ON
  Transport Lag:   0 seconds
  Apply Lag:       0 seconds
  Real Time Query: OFF
  Instance(s):
    south_sales1

Database Status:
SUCCESS
```

The apply lag can help you identify any problems that may exist with both the redo transport services and the log apply services.

4.6 Managing Data Protection Modes

The broker can simplify the process of setting up your configuration for any of the different grades of data protection: maximum protection, maximum availability, or maximum performance.

This section contains the following topics to help you configure the proper protection for your configuration:

- Section 4.6.1, "Setting the Protection Mode for Your Configuration"
- Section 4.6.2, "How the Protection Modes Influence Broker Operations"

4.6.1 Setting the Protection Mode for Your Configuration

To set the protection mode, perform the following steps:

Step 1 Determine which data protection mode you want to use.

Each data protection mode provides a different balance of data protection, data availability, and database performance. To select the data protection mode that meets the needs of your business, carefully consider your data protection requirements and the performance expectations of your users.

> **Note:** The maximum protection and maximum availability modes cannot be used if the only standby database in a configuration is a snapshot standby.

Maximum Availability This protection mode provides the highest level of data protection that is possible without compromising the availability of a primary database. Transactions do not commit until all redo data needed to recover those transactions has been written to the online redo log and to the standby redo log on at least one synchronized standby database. If the primary database cannot write its redo stream to at least one synchronized standby database, it operates as if it were in maximum performance mode to preserve primary database availability until it is again able to write its redo stream to a synchronized standby database.

This mode ensures that no data loss will occur if the primary database fails, but only if a second fault does not prevent a complete set of redo data from being sent from the primary database to at least one standby database.

You can enable fast-start failover if the protection mode is maximum availability.

Maximum Performance This protection mode provides the highest level of data protection that is possible without affecting the performance of a primary database. This is accomplished by allowing transactions to commit as soon as all redo data generated by those transactions has been written to the online log. Redo data is also written to one or more standby databases, but this is done asynchronously with respect to transaction commitment, so primary database performance is unaffected by delays in writing redo data to the standby database(s).

This protection mode offers slightly less data protection than maximum availability mode and has minimal impact on primary database performance.

This is the default protection mode.

You can enable fast-start failover if the protection mode is maximum performance.

Maximum Protection This protection mode ensures that no data loss will occur if the primary database fails. To provide this level of protection, the redo data needed to recover a transaction must be written to both the online redo log and to the standby redo log on at least one synchronized standby database before the transaction commits. To ensure that data loss cannot occur, the primary database will shut down, rather than continue processing transactions, if it cannot write its redo stream to at least one synchronized standby database.

Because this data protection mode prioritizes data protection over primary database availability, Oracle recommends that a minimum of two standby databases be used to protect a primary database that runs in maximum protection mode to prevent a single standby database failure from causing the primary database to shut down. If only one standby database is supporting maximum protection mode, Data Guard broker will disallow the shutdown of the apply instance. This prevents the primary database from shutting down.

You cannot enable fast-start failover if the protection mode is maximum protection.

See Also:

- Section 5.5 for information on fast-start failover
- *Oracle Data Guard Concepts and Administration* for complete information about data protection modes

Step 2 Set up standby redo log files.

You must add standby redo log files on all standby databases, regardless of the protection mode you are using. Also, Oracle requires that you add standby redo log files on the primary database in preparation for a future switchover or failover. Standby redo log files are required on the primary database if you want to enable fast-start failover.

Enterprise Manager automatically prompts you to select one or more standby databases in the configuration and sets up standby redo log (SRL) files on them and on the primary database in preparation for a future role change.

> **See Also:** If you are using the DGMGRL command-line interface, follow the instructions in *Oracle Data Guard Concepts and Administration* to configure standby redo log files.

Step 3 Set the LogXptMode configurable database property, if necessary.

If the data protection mode requires that you change the redo transport service used by any of the standby databases, change the setting of the `LogXptMode` database property appropriately on each standby database. See Section 4.4 for more information about setting the redo transport service. Table 4–2 shows the protection modes and the corresponding redo transport service.

Enterprise Manager automatically specifies the correct redo transport service on the primary database in preparation for a future switchover.

Table 4–2 Data Guard Protection Modes and Requirements

Protection Mode	Redo Transport	Standby Redo Log Files Needed?	Usable with Fast-Start Failover?
`MAXPROTECTION`	`SYNC`	Yes	No
`MAXAVAILABILITY`	`SYNC`	Yes	Yes
`MAXPERFORMANCE`	`ASYNC`	Yes	Yes

Step 4 Set the protection mode.

Set the protection mode using DGMGRL commands or Enterprise Manager.

With DGMGRL:

1. Use the `EDIT DATABASE (property)` command and specify the standby database whose redo transport service should be changed to correspond to the protection mode you plan to set. For example, if you plan to set the overall Data Guard configuration to operate in maximum availability mode, you must use the `EDIT DATABASE` command to set the `SYNC` mode for redo transport services. For example:

   ```
   DGMGRL> EDIT DATABASE 'South_Sales' SET PROPERTY 'LogXptMode'='SYNC';
   ```

   Do this also for the primary database or another standby database in the configuration to ensure that it can support the chosen protection mode after a switchover.

2. Use the `EDIT CONFIGURATION SET PROTECTION MODE AS` *`protection-mode`* command to set the overall configuration protection mode. For example:

```
DGMGRL> EDIT CONFIGURATION SET PROTECTION MODE AS MAXAVAILABILITY;
```

See Section 6.5 for a DGMGRL scenario showing how to set the protection mode.

With Enterprise Manager:

1. On the Data Guard overview page, click the link to the right of the Protection Mode label.
2. Select Maximum Protection, Maximum Availability, or Maximum Performance and click Continue.
3. If prompted, log in to the database with `SYSDBA` privileges and click Login.
4. Select one or more standby databases to support the protection mode that you selected. If standby redo log files are needed, verify the names of the log files. Click OK.
5. On the Confirmation page, click Yes.

After upgrading the protection mode from maximum performance mode to maximum protection mode using either DGMGRL or Enterprise Manager, the primary database will be restarted automatically if you are upgrading to maximum protection mode. The primary database need not be restarted following a downgrade of the protection mode.

No restart is required when upgrading the protection mode from maximum performance to maximum availability or from maximum availability to maximum protection.

Note: You can avoid a restart of the primary database when upgrading from maximum performance mode to maximum protection mode by first upgrading to maximum availability. Once in maximum availability mode, then upgrade to maximum protection.

Note: Online database relocation with Oracle RAC One Node cannot be performed on the only physical standby database that supports maximum protection mode.

If online database relocation must be performed, then you must first downgrade the protection mode to maximum availability. After the online database relocation of the physical standby database is performed, you can upgrade the protection mode back to maximum protection. A restart of the primary database is not required.

4.6.2 How the Protection Modes Influence Broker Operations

This section describes how operations such as switchover, failover, disabling, or enabling the Data Guard configuration can have an effect on the configuration's protection mode and redo transport services. This section contains the following sections:

- Upgrading or Downgrading the Current Protection Mode
- Switchover Operations

- Failover Operations
- Disable and Enable Operations
- Requirements For Removing a Database from the Configuration
- Requirements On Other Operations

4.6.2.1 Upgrading or Downgrading the Current Protection Mode

No restart is necessary when you upgrade the current Data Guard protection mode to maximum availability or when you downgrade the current Data Guard protection mode. Follow these recommendations when upgrading or downgrading the Data Guard protection mode:

- When upgrading the protection mode, upgrade the redo transport service before you upgrade the overall protection mode. At the time when you change the protection mode or reset the redo transport service of a standby database, the broker verifies that there is at least one standby database in the configuration that can support the desired grade of protection. If not, then the broker does not change the protection mode and returns an error.
- When downgrading the protection mode, downgrade the protection mode first and then change the redo transport service (if necessary). The broker will disallow a change of the redo transport service if doing so invalidates the current overall protection mode.

If you upgrade the protection mode from the maximum performance mode, the broker ensures that there is at least one standby database whose `LogXptMode` database property is set to `SYNC`. Additionally, for upgrades to maximum protection mode, the broker ensures there are no gaps in the redo data on the standby database. If there are no standby databases in the configuration that meet these requirements, the request to upgrade the protection mode is rejected with an error.

The protection mode cannot be changed if fast-start failover is enabled.

WARNING: The primary database will be shut down and restarted if you upgrade the protection mode from maximum performance to maximum protection. You can avoid this by first upgrading to maximum availability. Once in maximum availability mode, then upgrade to maximum protection.

4.6.2.2 Switchover Operations

A switchover does not change the overall Data Guard protection mode. The protection mode remains the same as it was before the switchover.

This requires that there be a standby database that is properly configured to support the current protection mode once the switchover completes. This can be either another standby database in the configuration or the current primary database that will become a standby database after the switchover completes.

Before you perform a switchover, if necessary, you can add standby redo log files and set the redo transport service on the current primary database, or on another standby database in the configuration, to the `SYNC` or `ASYNC` mode that is required to support the Data Guard protection mode. Then, when the switchover begins:

- The broker verifies the presence of standby redo log files and the redo transport service setting on each standby database and on the current primary database.

- The broker verifies there are no gaps in the redo data present on the target standby database.

If the verification is successful, the switchover continues; otherwise, the switchover fails, and the database roles and the broker configuration files remain unchanged.

WARNING: The broker will shut down and restart the primary database if the target of the switchover is a physical standby database.

See Also: Section 5.3 for more information about switchovers

4.6.2.3 Failover Operations

After you perform a manual failover, the Data Guard protection mode is downgraded to maximum performance mode if the protection mode was at maximum protection. You can upgrade the protection mode later, if necessary. If the protection mode was at maximum availability or maximum performance, it remains unchanged. The redo transport services of the standby databases remain unchanged.

If fast-start failover occurs, the broker preserves the protection mode that was in effect just prior to the fast-start failover.

See Also: Section 5.4 and Section 5.5 for more information about manual failover and fast-start failover, respectively

4.6.2.4 Disable and Enable Operations

When you disable broker management of a standby database, the broker checks to see if the overall protection mode can still be satisfied by any of the remaining standby databases. If not, the broker rejects the disable operation. Otherwise, the broker allows the disable operation to proceed as long as fast-start failover is not enabled. If it is enabled, the broker allows the disable operation to proceed only if the standby database is not the target standby database for fast-start failovers.

Caution: If you disable broker management of a standby database in the broker configuration, that standby database cannot be used by the broker as a failover target in the event of loss of the primary database.

After a standby database is successfully disabled, you can change the redo transport service for that database and the broker will record the change in the broker configuration file. The change will not affect the overall protection mode because it is guaranteed that at least one of the enabled standby databases already satisfies the overall protection mode requirement.

As long as fast-start failover is not enabled, you can disable the entire configuration regardless of the protection mode. You cannot disable the configuration if fast-start failover is enabled. See Section 5.5.2.2, "Restrictions When Fast-Start Failover is Enabled" for more information.

If the entire configuration is disabled, you can change any broker settings, including the redo transport services of the standby databases and the protection mode of the configuration. The broker saves the changes in the broker configuration file, but the changes will not be made to the database itself.

When enabling broker management of the entire configuration, the broker first checks to see if the protection mode will be satisfied by the redo transport services of the standby databases that will be enabled. If not, the enable operation fails and the configuration remains disabled. Otherwise, the enable operation successfully enables the configuration, and the broker enables the database using the settings saved in the broker configuration file.

4.6.2.5 Requirements For Removing a Database from the Configuration

When removing a standby database from the broker configuration, the broker checks to see if the protection mode will still be satisfied. The operation fails if:

- Removing the database compromises the protection mode
- Fast-start failover is enabled and you try to remove the standby database that is the target of the fast-start failover

You can remove the configuration at any time, unless fast-start failover is enabled.

4.6.2.6 Requirements On Other Operations

Some operations that take place in a broker configuration, especially operations related to redo transport services, can affect the overall protection mode. These operations include:

- Stopping redo transport services on the primary database
- Stopping redo transport services to individual standby databases
- Downgrading the `LogXptMode` database property from `SYNC` to `ASYNC` on the only standby database that supports a configuration operating in maximum availability mode or maximum protection mode

Before any of these operations can proceed, the broker checks to see if the protection mode will be supported by the redo transport service settings on the standby databases after the operation completes. If not, the broker fails the operation and returns an error.

4.7 Managing Fast-Start Failover

For *lights out administration*, you can enable **fast-start failover** to allow the broker to determine if a failover is necessary and to initiate a failover to a pre-specified target standby database, with either no data loss or a configurable amount of data loss. In addition, you can specify under which conditions or errors you want a failover to be initiated. Oracle also provides the `DBMS_DG` PL/SQL package to allow an application to request a fast-start failover.

The following configuration properties are used to control the behavior of fast-start failover:

- `FastStartFailoverThreshold`
- `FastStartFailoverPmyShutdown`
- `FastStartFailoverLagLimit`
- `FastStartFailoverAutoReinstate`
- `FastStartFailoverTarget`

You can also use Oracle Enterprise Manager or the DGMGRL `ENABLE FAST_START FAILOVER CONDITION` and `DISABLE FAST_START FAILOVER CONDITION` commands to specify conditions for which a fast-start failover should occur.

4.7.1 Configure Properties to Tune Fast-Start Failover

The configurable properties for fast-start failover include:

- `FastStartFailoverThreshold`

  Set the `FastStartFailoverThreshold` configuration property to specify the number of seconds you want the observer and target standby database to wait (after detecting the primary database is unavailable) before initiating a failover. See Section 5.5.2, "Enabling Fast-Start Failover" on page 5-16 for more information and an example.

- `FastStartFailoverPmyShutdown`

  The `FastStartFailoverPmyShutdown` configuration property controls whether the primary database will shut down if redo generation has been stalled (`FS_FAILOVER_STATUS` column of `V$DATABASE` contains a value of `STALLED`) and the primary database has lost connectivity with the observer and target standby database for longer than the number of seconds specified by the `FastStartFailoverThreshold` configuration property. The default value for FastStartFailoverPmyShutdown is `TRUE`.

  > **Note:** The primary database is always shut down if a user configurable fast-start failover condition is detected or if an application initiated a fast-start failover by calling the `DBMS_DG.INITIATE_FS_FAILOVER` function.

- `FastStartFailoverLagLimit`

  The fast-start failover feature can be configured on databases operating in maximum performance mode. Destinations that receive redo in `ASYNC` mode will be acceptable fast-start failover target standby databases, and these destinations can lag the primary in terms of redo received and applied. A configurable time-based limit can be specified through the `FastStartFailoverLagLimit` configuration property. If the standby database's applied redo point is within this many seconds of the primary's redo generation point, a fast-start failover will be allowed. If its applied point lags beyond this limit, a fast-start failover is not allowed. The `FastStartFailoverLagLimit` configuration property is not used if fast-start failover is enabled when the configuration is operating in maximum availability mode.

  An `ASYNC` destination is only a valid fast-start failover target in a configuration operating in maximum performance mode. If you want to change protection mode or change the destination to sync, you must first disable fast-start failover. Likewise, changing the protection mode from `MAXAVAILABILITY` to `MAXPERFORMANCE` will require first disabling fast-start failover and changing the `LogXptMode` property of the primary and target standby to `ASYNC`.

  Reinstatement of an old primary will be possible after a fast-start failover to an `ASYNC` target standby. If the observer rediscovers the old primary, it will automatically reinstate the old primary and any redo generated within the specified lag will be lost.

  > **See Also:** Chapter 8, "Data Guard Broker Properties" for more information

- `FastStartFailoverAutoReinstate`

The `FastStartFailoverAutoReinstate` configuration property controls whether the former primary database is automatically reinstated if a fast-start failover occurred because the primary database crashed or was stalled for longer than `FastStartFailoverThreshold` seconds. The default value for `FastStartFailoverAutoReinstate` is `TRUE`.

If you want to perform diagnostic or repair work after failover has completed, you can avoid an automatic reinstatement by setting the `FastStartFailoverAutoReinstate` configuration property to `FALSE`.

Note: The former primary database is never automatically reinstated if a fast-start failover occurred because a user configurable fast-start failover condition was detected or because an application initiated a fast-start failover by calling the `DBMS_DG.INITIATE_FS_FAILOVER` function.

4.7.2 Configure Conditions for Fast-start Failover

By default, a fast-start failover is done when neither the observer nor the standby can reach the primary after the configured time threshold (`FastStartFailoverThreshold`) has passed. There are also other conditions under which you might want a fast-start failover to occur.

The configurable conditions fall into two classes: those detected through the database health-check mechanism and those detected through errors raised by the Oracle server (such as ORA errors). When a specified condition occurs, the observer will initiate a fast-start failover without waiting for `FastStartFailoverThreshold` to expire, assuming the standby is in a valid state to accept a failover.

Each condition may be enabled or disabled individually. The Data Guard configuration persists all user specified configurable fast-start failover conditions in the broker configuration file.

The observer will detect when the primary database has signaled any of the enabled health-check conditions and will immediately initiate a fast-start failover, assuming the standby is in a valid fast-start failover state (observed and either synchronized or within lag limits) to accept a failover.

For specified Oracle ORA-Error conditions, the primary database will notify the observer if the error is signaled and the observer will immediately initiate a fast-start failover, assuming the standby is in a valid fast-start failover state (observed and either synchronized or within lag limits) to accept a failover.

Note: The primary database will shut down and the observer will not attempt to automatically reinstate the former primary database.

See Also:

- Oracle Enterprise Manager online help
- ENABLE FAST_START FAILOVER CONDITION on page 7-32
- DISABLE FAST_START FAILOVER CONDITION on page 7-17

4.7.3 Application Initiated Fast-Start Failover

Use the DBMS_DG PL/SQL package to enable an application to initiate a fast-start failover when it encounters specific conditions. When a condition uniquely known to the application is detected, it may call the DBMS_DG.INITIATE_FS_FAILOVER procedure, thus alerting the primary database that it wants a fast-start failover to occur immediately. The primary database will notify the observer of this and the observer will immediately initiate a fast-start failover, assuming the standby is in a valid fast-start failover state (observed and either synchronized or within lag limits) to accept a failover.

If the configuration is not failable, the DBMS_DG.INITIATE_FS_FAILOVER procedure will return an ORA error number (not signal an exception) informing the caller that a fast-start could not be performed.

Note: The primary database will shut down and the observer will not attempt to automatically reinstate the former primary database.

See Also: *Oracle Database PL/SQL Packages and Types Reference* for more information about the DBMS_DG package

4.8 Managing Database Conversions

You can use the DGMGRL CONVERT DATABASE command to convert a physical standby database to a snapshot standby database. A snapshot standby database is a fully updatable standby database.

Like a physical or logical standby database, a snapshot standby database receives and archives redo data from a primary database. However, unlike a physical or logical standby database, a snapshot standby database does not apply the redo data that it receives. The redo data received by a snapshot standby database is not applied until the snapshot standby is converted back into a physical standby database, after first discarding any local updates made to the snapshot standby database.

To convert a physical standby database to a snapshot standby database you must have Flashback Database enabled. The following example shows how to convert a physical standby database to a snapshot standby database:

```
DGMGRL> CONVERT DATABASE 'South_Sales' TO SNAPSHOT STANDBY;
```

When you are ready to convert the snapshot back into a physical standby, use the DGMGRL CONVERT DATABASE command as follows:

```
DGMGRL> CONVERT DATABASE 'South_Sales' TO PHYSICAL STANDBY;
```

4.9 Database Status

Database status reveals the health of the database. In general, the broker checks the health of a database by verifying if the actual database state and settings match with those described in the broker configuration file. This is done by checking if any component of the Data Guard configuration is functioning incorrectly (for example, if redo transport services have an error), and by checking if other required database settings are correctly set (for example, if the server parameter files are available and if the ARCHIVELOG mode is turned on). The following is a detailed list of what is being checked by the broker on a primary database and a standby database.

On a primary database, the health check determines whether the following conditions are met:

- Database is in the state specified by the user, as recorded in the broker configuration file
- Database is in the correct data protection mode
- Database is using a server parameter file
- Database is in the `ARCHIVELOG` mode
- Database guard is turned off
- Supplemental logging is turned on when there is a logical standby database in the configuration
- Redo transport services do not have any errors
- Database settings match those specified by the broker configurable properties
- Redo transport settings match those specified by the redo transport-related properties of the standby databases
- Current data protection level is consistent with configured data protection mode
- Primary database is able to resolve all gaps for all standby databases

On a standby database, the health check determines whether the following conditions are met:

- Database is in the state specified by the user, as recorded in the broker configuration file
- Database is using a server parameter file
- Database settings match those specified by the broker configurable properties
- Database guard is turned on when the database is a logical standby database
- Primary and target standby databases are synchronized or within lag limits if fast-start failover is enabled

The following monitorable database properties can be used to query the database status:

- `LogXptStatus`
- `InconsistentProperties`
- `InconsistentLogXptProps`

> **Note:** These properties are directly accessed through the DGMGRL command-line interface. Enterprise Manager rearranges the values of these properties for presentation in the GUI.

You can use the `SHOW DATABASE <db_unique_name>` command to get a brief description of the database (name, role, and so on), database status, and information about any health check problems. For example, the output of the following `SHOW DATABASE` command shows two problems: some redo transport services errors and an inconsistent redo transport-related property

```
DGMGRL> SHOW DATABASE 'North_Sales';

Database - North_Sales
```

```
  Role: PRIMARY
  Intended State: TRANSPORT-OFF
  Instance(s):
    north_sales1
      Error: ORA-16737: the redo transport service for standby
        database "South_Sales" has an error

    north_sales2
      Error: ORA-16737: the redo transport service for standby
        database "South_Sales" has an error
      Warning: ORA-16715: redo transport-related property
        ReopenSecs of standby "South_Sales" is inconsistent
Database Status:
ERROR
```

To further check the details about the database status, you can use the `LogXptStatus`, `InconsistentProperties`, and `InconsistentLogXptProps` monitorable database properties. `LogXptStatus` lists all log transport errors detected on all instances of the primary database. `InconsistentProperties` lists all properties that have inconsistent values between the broker configuration file and the database settings. `InconsistentLogXptProps` lists all redo transport-related properties of standby databases that have inconsistent values between the broker configuration file and the redo transport settings. .

Issue the following `SHOW DATABASE` commands to obtain further details about the problems.

```
DGMGRL> SHOW DATABASE 'North_Sales' 'LogXptStatus';
LOG TRANSPORT STATUS
PRIMARY_INSTANCE_NAME  STANDBY_DATABASE_NAME  STATUS
         north_sales1            South_Sales  ORA-12541: TNS:no listener
         north_sales2            South_Sales  ORA-12541: TNS:no listener

DGMGRL> SHOW DATABASE 'North_Sales' 'InconsistentLogXptProps';
INCONSISTENT LOG TRANSPORT PROPERTIES
 INSTANCE_NAME  STANDBY_NAME  PROPERTY_NAME  MEMORY_VALUE  BROKER_VALUE
  north_sales2   South_Sales     ReopenSecs           600           300
```

> **See Also:** Chapter 8 for detailed information about database properties

5

Switchover and Failover Operations

This chapter describes how the broker manages databases during switchover and failover. It contains the following topics:

- Overview of Switchover and Failover in a Broker Environment
- Choosing a Target Standby Database
- Switchover
- Manual Failover
- Fast-Start Failover
- Database Client Considerations

5.1 Overview of Switchover and Failover in a Broker Environment

An Oracle database operates in one of two roles: primary or standby. Data Guard helps you change the role of a database using either a switchover or a failover:

- A **switchover** is a role reversal between the primary database and one of its standby databases. A switchover guarantees no data loss and is typically done for planned maintenance of the primary system. During a switchover, the primary database transitions to a standby role, and the standby database transitions to the primary role.
- A **failover** is done when the primary database (all instances of an Oracle RAC primary database) fails or has become unreachable and one of the standby databases is transitioned to take over the primary role. Failover may or may not result in data loss depending on the protection mode in effect at the time of the failover.

Without the broker, you perform role transitions by issuing a series of SQL statements (as described in *Oracle Data Guard Concepts and Administration*). The broker simplifies switchovers and failovers by allowing you to invoke them using a single key click in Oracle Enterprise Manager or a single command in the DGMGRL command-line interface (referred to in this documentation as *manual* failover). Moreover, you can enable fast-start failover to fail over automatically when the conditions for fast-start failover are met. When fast-start failover is enabled, the broker determines if a failover is necessary and initiates the failover to the specified target standby database automatically, with no need for DBA intervention.

Fast-start failover allows you to increase availability with less need for manual intervention, thereby reducing management costs. Manual failover gives you control over exactly when a failover occurs and to which target standby database. Regardless

of the method you choose, the broker coordinates the role transition on all databases in the configuration.

5.2 Choosing a Target Standby Database

There are many factors to take into consideration when selecting a standby database to be the next primary database after a switchover or a failover. You need to consider all of the options at the time you are building your Data Guard configuration, including factors such as the characteristics of physical standbys versus logical standbys versus snapshot standbys, the network latency to your standby database sites, the computing capabilities at a future primary database site, and so on.

Note: A snapshot standby cannot be the target of a switchover or fast-start failover operation. You can, however, perform a manual failover to a snapshot standby.

For switchovers, understanding all of the factors can simplify the choice of which standby database to consider as your new primary database. In disaster situations where a failover is necessary, you may be more limited in which standby database is the best one to pick up the failed primary database's activities. The following sections provide guidelines to help you choose a target standby database.

Note: For fast-start failover, you must pre-select the target standby database that will be used. Section 5.5 provides more information about fast-start failover.

5.2.1 Choosing a Target Standby Database for Switchover

When performing a switchover in a configuration whose standby databases are all of the same type (all physical or all logical standby databases), choose the standby database that has the least amount of unapplied redo. By choosing the standby database with the least amount of unapplied redo, you can minimize the overall time it takes to complete the switchover operation. For example:

- Using DGMGRL, you can do this by examining the Apply Lag row of the `SHOW DATABASE` output for each standby database in the configuration.
- Using Enterprise Manager, you can view the value of the `ApplyLag` column for each standby database in the `Standby Databases` section of the Data Guard Overview Page.

If the configuration contains both physical and logical standby databases, consider choosing a physical standby database (that has the least amount of unapplied redo) to be the target standby database. A switchover to a physical standby database is preferable because all databases in the configuration will be available as standby databases to the new primary database after the switchover operation completes. Whereas a switchover to a logical standby database will invalidate and disable all of the physical and snapshot standby databases in the configuration. You will then need to re-create the physical standby databases from a copy of the new primary database before you can reenable them.

You cannot perform a switchover to a snapshot standby database unless you first convert it back to a physical standby database.

Note: If the Data Guard configuration is operating in maximum protection mode, the broker does not allow a switchover to occur to a logical standby database. The configuration must be operating in either maximum availability mode or maximum performance mode in order to be able to switch over to a logical standby database.

5.2.2 Choosing a Target Standby Database for Failover

When performing a failover in a configuration whose standbys are all of the same type, choose the standby database that has the smallest transport lag. Doing so can minimize the amount of data loss and in some cases, incur no data loss at all.

If the configuration contains physical, snapshot, and logical standby databases, consider choosing a physical standby database as the target standby database. A failover to a physical standby database is preferable because it is likely that all standby databases in the configuration will still be available as standby databases to the new primary database after the failover operation completes.

You may failover to a snapshot standby database. However failing over to a snapshot standby database will require more time because the broker must first convert it back to a physical standby database. After the conversion, the broker will start Redo Apply to apply accumulated redo data, before failing the database over to the primary role. Because the broker performs the failover after converting the snapshot standby database to a physical standby database, it is likely that all standby databases in the configuration will still be available as standby databases to the new primary database after the failover operation completes.

A failover to a logical standby database requires that all physical and snapshot standby databases be re-created from a copy of the new primary database after the failover completes. In addition, a logical standby database may contain only a subset of the data present in the primary database. (For example, if the `DBMS_LOGSTDBY.SKIP` procedure was used to specify which database operations done on the primary database will not be applied to the logical standby database.)

However, there may be exceptions to the recommendation to choose a physical standby database as the target standby database. For example, if all your physical standbys are also unavailable, then failing over to a logical standby is your only choice.

5.3 Switchover

You can switch a database from the primary role to the standby role, as well as from standby to primary. This is known as a database switchover, because the standby database that you specify becomes the primary database, and the original primary database becomes a standby database, with no loss of data.

Whenever possible, you should switch over to a physical standby database:

- If the switchover transitions a physical standby database to the primary role, then:
  - The original primary database will be switched to a physical standby role.
  - The online redo log files will be continuously archived from the new primary database to all standby databases in the configuration.
  - The original primary database will be restarted as a part of the switchover operation. Note that the new primary database does not need to be restarted.

Standby databases not involved in the switchover (known as bystander standby databases) continue operating in the state they were in before the switchover occurred and will automatically begin applying redo data received from the new primary database.

- If the switchover transitions a logical standby database to the primary role, then:
  - The original primary database will be switched to a logical standby role.
  - Neither the primary database nor the logical standby database needs to be restarted after the switchover completes.

    Other logical standby bystander databases in the broker configuration will remain viable after the switchover. There is no need to restart any databases. All physical and snapshot standby databases will be disabled and must be re-created from a copy of the new primary database after a switchover to a logical standby database.

Switchover to a logical standby database is disallowed when the configuration is operating in maximum protection mode.

WARNING: Switching over to a logical standby database results in the snapshot and physical standby databases in the broker configuration being disabled by the broker, making these databases no longer viable as standby databases. Section 5.4.3 describes how to restore their viability as standby databases.

If you intend to switch back to the original primary database relatively soon, you may allow the physical and snapshot standbys to remain disabled. Once you have completed the switchover back to the original primary, you may then reenable the physical and snapshot standby databases since they are still viable standbys for the original primary database.

5.3.1 Before You Perform a Switchover Operation

Consider the following points before you begin a switchover:

- When you start a switchover, the broker verifies that at least one standby database, including the primary database that is about to be transitioned to the standby role, is configured to support the overall protection mode (maximum protection, maximum availability, or maximum performance) after the switchover is completed.
- Prepare the primary database in advance for its possible future role as a standby database in the context of the overall protection mode (see Section 4.6). Such preparation includes:
  - Ensuring that standby redo log files are configured on the primary database.
  - Presetting database properties related to redo transport services, such as `LogXptMode`, `NetTimeout`, `StandbyArchiveLocation`, and `AlternateLocation`. For more details about managing redo transport services using database properties, see Section 4.4.
  - Presetting database properties related to Redo Apply services, such as `DelayMins`. For more details about managing Redo Apply services using properties, see Section 4.5.

  - For each temporary table, verifying that temporary files associated with that table on the primary database also exist on the standby database.

  Note that the broker does not use the properties to set up redo transport services and Redo Apply services until you actually switch over the primary database to the standby role. Thus, the validity of the values of these properties is not verified until after the switchover. Once you set these properties, their values persist through role changes during switchover and failover.

- If fast-start failover is enabled in either maximum availability or maximum performance mode, a switchover can be performed only to the pre-specified target standby database and only if the standby database is synchronized with the primary database. For information about enabling fast-start failover, see Section 5.5.2.

After a switchover completes, the broker preserves the overall Data Guard protection mode as part of the switchover process by keeping the protection mode at the same protection level (maximum protection, maximum availability, or maximum performance) it was at before the switchover. Also, the network transmission mode (`SYNC` or `ASYNC`) for transporting redo to other bystander standby databases does not change after a switchover. Apply services on all other bystander standby databases automatically begin applying redo data received from the new primary database.

If there are physical or snapshot standby databases in the configuration and the switchover occurs to a logical standby database, you need to re-create those databases from a copy of the new primary database and then reenable those databases, as described in Section 5.4.3.

5.3.2 Starting a Switchover

The act of switching roles should be a well-planned activity. The primary and standby databases involved in the switchover should have as small a redo lag as possible. *Oracle Data Guard Concepts and Administration* provides information about setting up the databases in preparation of a switchover.

To start a switchover using Enterprise Manager, select the standby database that you want to change to the primary role and click **Switchover**. When using DGMGRL, you need to issue only one `SWITCHOVER` command to specify the name of the standby database that you want to change into the primary role.

The broker controls the rest of the switchover, as described in Section 5.3.3.

5.3.3 How the Broker Performs a Switchover

Once you start the switchover, the broker:

1. Verifies that the primary and the target standby databases are in the following states:

   a. The primary database is enabled and is in the `TRANSPORT-ON` state.

   b. The target standby database is enabled and is in the `APPLY-ON` state.

   The broker allows the switchover to proceed as long as there are no errors for the primary database and the standby database that you selected to participate in the switchover operation. Errors occurring for any other bystander standby databases will not impede the switchover.

2. Shuts down all instances except one, if required.

If you are switching over to a physical standby database, the broker shuts down all but one instance on the current primary database. No instances will be shut down on the target physical standby database.

No instances will be shut down if switching over to a logical standby database. You cannot switch over to a snapshot standby database.

3. Switches roles between the primary and standby databases.

   The broker first converts the original primary database to run in the standby role. Then, the broker transitions the target standby database to the primary role. If any errors occur during either conversion, the broker stops the switchover. See Section 9.3, "Troubleshooting Problems During a Switchover Operation" for more information.

4. Updates the broker configuration file to record the change in roles.

   Because the configuration file profiles all database objects in the configuration, this ensures that each database will run in the correct role and state should it be restarted later for any reason.

5. Restarts the new standby (former primary) database if the switchover occurs to a physical standby database, and Redo Apply begins applying redo data from the new primary database. If this is an Oracle RAC physical standby database, the broker directs Oracle Clusterware to restart the instances that were shut down prior to the switchover. In a configuration operating in maximum protection mode, the new primary database will also be restarted.

6. The new primary database is opened in read/write mode and redo transport services are started.

   If the former physical standby database was running with real-time query enabled, the new physical standby database will run with real-time query enabled.

The broker verifies the state and status of the databases to ensure that the switchover transitioned the databases to their new role correctly. Bystander standby databases that are not disabled by the broker after the switchover will continue operating in the state they were in before the switchover. Redo Apply and SQL Apply on all other bystander standby databases automatically begin applying redo data received from the new primary database.

5.4 Manual Failover

You can convert a standby database to a primary database when the original primary database fails and there is no possibility of recovering the primary database in a timely manner. This is known as a **manual failover**. There may or may not be data loss depending upon whether your primary and target standby databases were synchronized at the time of the primary database failure. The word *manual* is used to contrast this type of failover with a fast-start failover (described in Section 5.5).

Note: You can perform a manual failover even if fast-start failover is enabled. See Section 5.5.2.4 for more information.

The following sections describe how to perform manual failovers:

- Section 5.4.1, "Complete and Immediate Manual Failovers"
- Section 5.4.2, "Performing a Manual Failover Operation"
- Section 5.4.3, "Reenabling Disabled Databases After a Role Change"

5.4.1 Complete and Immediate Manual Failovers

Using Enterprise Manager or DGMGRL, you can perform either a *complete* (recommended) or an *immediate* failover:

- A *complete* failover is the recommended and default failover option. It automatically recovers the maximum amount of redo data for the protection mode the configuration is operating in. A complete failover also attempts to avoid disabling any standby databases that were not the target of the failover, so that they may continue serving as standby databases to the new primary database.

  Whether or not standby databases that were not the target of failover (bystander standby databases) are disabled depends upon how much redo data they have applied relative to the failover target and the standby type of the failover target:

  - If the failover target is a physical or snapshot standby database, the original primary database must be reinstated or re-created in order to be a standby database for the new primary database. In addition, some standby databases may be disabled by the broker during the failover if the broker detects that they have applied redo beyond where the new primary database had applied. Any standby database that was disabled by the broker must be reinstated or re-created, as described in Section 5.4.3, before it can be a standby database for the new primary database.

    Note that if failover was performed on a snapshot standby database, the old primary must be either reinstated or re-created as a physical standby database.

  - If the failover target is a logical standby database, the original primary database and all physical and snapshot standby databases in the configuration will be disabled. The primary database can be reinstated if it had flashback database enabled. The physical and snapshot standby databases will have to be re-created from a copy of the new primary database. See Section 5.4.3 for more information.

  If the primary database can be mounted, it may be possible to flush any unsent redo data from the primary database to the target standby database using the `ALTER SYSTEM FLUSH REDO` SQL statement. If this operation is successful, a zero data loss failover may be possible even if the primary database is not in a zero data loss protection mode. See *Oracle Data Guard Concepts and Administration* for more information on using the `ALTER SYSTEM FLUSH REDO` statement.

  During a complete failover, the broker performs the failover steps described in Section 5.4.2.1.

- An *immediate* failover is the fastest type of failover. However, no additional data is applied on the standby database once you invoke the failover. Another consequence of immediate failover is that all other databases in the configuration are disabled and must be reinstated or re-created before they can serve as standby databases for the new primary database. Section 5.4.3 describes how to do this. During an immediate failover, the broker performs the failover steps described in Section 5.4.2.2.

Caution: Always try to perform a complete failover first. Only when a complete failover is unsuccessful should you perform an immediate failover. Depending on the destination attributes of redo transport services, a complete failover can occur without any data loss, while an immediate failover usually results in data loss.

5.4.2 Performing a Manual Failover Operation

After determining that there is no possibility of recovering the primary database in a timely manner, ensure that the primary database is shut down and then begin the failover operation.

The steps in this section describe how to perform a manual failover. Depending on the failover and the types of standby databases involved, some of the databases may need to be reinstated or re-created. The instructions guide you through the appropriate steps for each type of situation.

Step 1 Determine which of the available standby databases is the best target for the failover.

Follow the guidelines described in Section 5.2, "Choosing a Target Standby Database".

Step 2 Start the failover.

Using Enterprise Manager or DGMGRL, perform either a *complete* (recommended) or an *immediate* failover.

Manual Failover Using Enterprise Manager:

On the Data Guard Overview Page in Enterprise Manager, select the standby database that you want to change to the primary role and click **Failover**. Then, on the Failover Confirmation Page, click **Yes** to invoke the default Complete failover option.

Manual Failover Using DGMGRL:

On the target standby database, issue the `FAILOVER` command to invoke a complete failover, specifying the name of the standby database that you want to change into the primary role:

```
DGMGRL> FAILOVER TO database-name [IMMEDIATE];
```

See Also:

- FAILOVER on page 7-34

If the target is a snapshot standby database, the broker first converts the database to a physical standby database. If performing a complete failover, all accumulated redo data will be applied before changing the role of the database to primary. If performing an immediate failover, the role of the database will be changed to primary without applying any accumulated redo data.

No instances will be shut down if failing over to a physical or logical standby database.

Step 3 Reset the protection mode.

After a manual failover (complete or immediate), the overall Data Guard protection mode is handled as follows:

- If the protection mode was at maximum protection, it is reset to maximum performance. You can upgrade the protection mode later, if necessary, as described in Section 4.6.1.
- If the protection mode was at maximum availability or maximum performance, it remains unchanged.

Note: If you perform a manual failover when fast-start failover is enabled:

- The failover can only be performed to the pre-selected target standby database.
- The broker preserves the protection mode that was in effect prior to the failover.

Step 4 Re-establish a disaster-recovery configuration.

To maintain a viable disaster-recovery solution in the event of another disaster, you may need to perform the additional steps described in Section 5.4.3 to:

- Reinstate the original primary database to act as a standby database in the new configuration.
- Reinstate or re-create standby databases in the configuration that were disabled by the broker.

  After a complete failover finishes, any bystander standby database that is not viable as a standby for the new primary database will be disabled by the broker. This can happen for either of the following reasons:

  – A bystander standby database has applied more redo data than the new primary database itself had applied when it was a standby database. The standby database must be re-created or reinstated before it can serve as a standby for the new primary database.

  – The failover was to a logical standby database. The broker disables all of the physical and snapshot standby databases in the configuration. They must be re-created before they can serve as standby to the new primary database.

5.4.2.1 How the Broker Performs a Complete Failover Operation

Once you start a complete failover, the broker:

1. Verifies that the target standby database is enabled. If the database is not enabled, you will not be able to perform a failover to this database.
2. Waits for the target standby database to finish applying any unapplied redo data before stopping Redo Apply (if the target is a physical standby database) or SQL Apply (if the target is a logical standby database).

   If the target is a snapshot standby database, the broker first converts the database back to a physical standby and then starts Redo Apply to apply all the accumulated redo before completing the failover and opening the database as a primary database.
3. Transitions the target standby database into the primary database role, as follows:

   a. Changes the role of the database from standby to primary.

   b. Opens the new primary database in read/write mode.

   c. Determines whether or not any standby databases that did not participate in the failover operation have applied redo data beyond the new primary database, and thus need to be disabled.

   If a bystander standby database is not disabled by the broker during this failover, it will remain in the state it was in before the failover. For example, if

a physical standby database was in the `APPLY-OFF` state, it will remain in the `APPLY-OFF` state.

By default, the broker always determines whether bystander standby databases will be viable standby databases for the new primary when performing a complete failover. If you want the broker to skip this viability check of bystander standby databases during a complete failover, thus decreasing the overall failover time, set the `BystandersFollowRoleChange` configuration property to `NONE`.

When this property is set to `NONE`, the broker will disable all bystander standby databases without checking whether they have applied more redo data than the new primary database. You will have to reinstate or re-create (see Section 5.4.3) the standby databases after failover has completed. The `SHOW CONFIGURATION` command will show you which databases can be reinstated and which databases must be re-created. Use the `SHOW CONFIGURATION BystandersFollowRoleChange` command to see the value of this property. The default value is `ALL`.

This property also affects whether the broker skips viability checks of bystander standby databases when a fast-start failover occurs.

d. Starts redo transport services to begin transmitting redo data to all bystander standby databases that were not disabled.

Note: Bystander standby databases may be disabled by the broker during the failover, and they must be reinstated or re-created before they can serve as standby databases to the new primary database. Oracle recommends configuring Flashback Database on every database so that if failover occurs to a physical standby database, you can more easily reinstate any disabled standby databases. If failover occurs to a logical standby database, all physical and snapshot standby databases will be disabled by the broker. In this case, Flashback Database cannot be used to reinstate databases. They must be re-created from a copy of the new primary database. Logical standby databases that are disabled during failover can be reinstated.

---

4. If the failover target database is an Oracle RAC physical or snapshot standby database, the broker directs Oracle Clusterware to restart all instances that may have been shut down prior to the failover.

The broker allows the failover to proceed as long as there are no errors for the standby database that you selected to participate in the failover. Errors occurring for any bystander standby databases will not stop the failover. If you initiated a complete failover and it fails, you might need to use immediate failover.

5.4.2.2 How the Broker Performs an Immediate Failover Operation

Once you start an immediate failover, the broker:

1. Verifies that the target standby database is enabled. If the standby database is not enabled for management by the broker, then the failover cannot occur.

2. Stops Redo Apply or SQL Apply on the standby database immediately, without waiting until all available redo data has been applied. This may result in data loss.

3. Transitions the target standby database into the primary role, opens the new primary database in read/write mode, and starts redo transport services.

After an immediate failover completes, all the standby databases in the configuration, regardless of their type, are disabled. They may be reinstated if Flashback Database is enabled on those databases. Otherwise, they must be re-created from a copy of the new primary database.

The broker allows a complete failover to proceed as long as there are no errors present on the standby database that you selected to participate in the failover.

The broker allows an immediate failover to proceed even if there are errors present on the standby database that you selected to participate in the failover.

5.4.3 Reenabling Disabled Databases After a Role Change

To restore your original disaster-recovery solution after switchover to a logical standby database or after failover to any standby database, you may need to perform additional steps.

Databases that have been disabled after a role transition are not *removed* from the broker configuration, but they are no longer managed by the broker.

To reenable broker management of these databases, you must reinstate or re-create the databases using one of the following procedures:

- If a database can be reinstated, the database will show the following status:

  ```
  ORA-16661: the standby database needs to be reinstated
  ```

  Reinstate the database using the DGMGRL `REINSTATE DATABASE` command or the reinstate option in Enterprise Manager, as described in Section 5.4.3.1, "How to Reinstate a Database" on page 5-12. The broker automatically reenables the database as part of reinstating it.

- If a database must be re-created from a copy of the new primary database, it will have the following status:

  ```
  ORA-16795: the standby database needs to be re-created
  ```

  Re-create the standby database from a copy of the primary database and then reenable it. The procedures for creating a standby database are documented in *Oracle Data Guard Concepts and Administration*. See Section 5.4.3.2, "How to Re-create and Reenable a Disabled Database" on page 5-12 for more information.

  Note: Any database that was disabled while multiple role changes were performed cannot be reinstated. You must re-create the database manually from a copy of the current primary database and then reenable the database in the broker configuration.

Whether you reinstate or re-create a database depends on if you performed a switchover or failover and on the type of standby database that was the target of the operation. Note that role changes to logical and snapshot standby databases will always result in physical standby database bystanders being disabled. They cannot be reinstated. They must be re-created from a copy of the new primary database.

The following sections describe how to reinstate or reenable a database.

5.4.3.1 How to Reinstate a Database

You can use the broker's reinstate capability to make the failed primary database a viable standby database for the new primary. This can be done regardless of whether the failover was done to a physical, logical, or snapshot standby database.

You can also reinstate bystander standby databases that were disabled during a failover operation.

Databases that can be reinstated will have the following status value:

```
ORA-16661: the standby database needs to be reinstated
```

For the `REINSTATE` command to succeed, Flashback Database must have been enabled on the database prior to the failover and there must be sufficient flashback logs on that database. In addition, the database to be reinstated and the new primary database must have network connectivity.

To reinstate a database:

1. Restart the database to the mounted state
2. Connect to the new primary database
3. Use Enterprise Manager or DGMGRL to reinstate the database

The broker reinstates a failed primary database as a standby database of the same type (physical or logical standby database) as the old standby database. The only exception to this is failovers to snapshot standby databases. In such cases, the failed primary database is reinstated as a physical standby database.

The broker reinstates bystander standby databases that were disabled during a failover as standby databases to the new primary database.

Reinstatement Using Enterprise Manager

On the Data Guard Overview page, click the `Database must be reinstated` link. This brings up the General Properties page that provides a Reinstate button. After you click the Reinstate button, Enterprise Manager begins reinstating the database.

When the process is complete, the database will be enabled as a standby database to the new primary database, and Enterprise Manager displays the Data Guard Overview page.

Reinstatement Using DGMGRL

Issue the following command while connected to any database in the broker configuration, except the database that is to be reinstated:

```
DGMGRL> REINSTATE DATABASE db_unique_name;
```

The newly reinstated standby database will begin serving as a standby database to the new primary database. If reinstatement of a database fails, its status changes to `ORA-16795: the standby database needs to be re-created`. You must then re-create it from a copy of the new primary database and reenable it as described in Section 5.4.3.2.

5.4.3.2 How to Re-create and Reenable a Disabled Database

If you performed a failover or switchover that requires you to re-create the failed primary database or standby databases that were disabled during the role transition, follow the procedures in the *Oracle Data Guard Concepts and Administration* chapters, "Creating a Physical Standby Database" and "Creating a Logical Standby Database."

Note that if you are re-creating the old primary database, it must be created as the standby type of the old standby database. For example, if the old standby was a physical or snapshot standby, then the old primary must be re-created as a physical standby.

After the database has been re-created, enable broker management of the re-created standby database by using the DGMGRL `ENABLE DATABASE` command.

5.5 Fast-Start Failover

Fast-start failover allows the broker to automatically fail over to a previously chosen standby database in the event of loss of the primary database. Fast-start failover quickly and reliably fails over the target standby database to the primary database role, without requiring you to perform any manual steps to invoke the failover. Fast-start failover can be used only in a broker configuration and can be configured only through DGMGRL or Enterprise Manager.

Either maximum availability mode or maximum performance mode can be used with fast-start failover. Maximum availability mode provides an automatic failover environment guaranteed to lose no data. Maximum performance mode provides an automatic failover environment guaranteed to lose no more than the amount of data (in seconds) specified by the `FastStartFailoverLagLimit` configuration property. This property indicates the maximum amount of data loss that is permissible in order for an automatic failover to occur. It is only used when fast-start failover is enabled and the configuration is operating in maximum performance mode.

Once fast-start failover is enabled, the broker will ensure that fast-start failover is only possible when the configured data loss guarantee can be upheld. If the configured data loss guarantee cannot be upheld, redo generation on the primary database will be stalled. To avoid a prolonged stall, either the observer or target standby database may allow the primary database to continue redo generation after first recording that a fast-start failover cannot happen.

The broker will restore the ability to automatically failover once the configured data loss guarantee is restored. For a configuration that is operating in maximum availability mode, this occurs once the target standby database has received all missing redo data. For a configuration that is operating in maximum performance mode, this occurs once the target standby database's redo applied point is no longer lagging the primary database's redo generation point by the value specified by the `FastStartFailoverLagLimit` configuration property.

This section describes how to enable fast-start failover and an **observer** site that monitors the fast-start failover environment. The observer is a separate OCI client-side component that runs on a different computer from the primary and standby databases and monitors the availability of the primary database. The observer is described in more detail in Section 5.5.7.

Once the observer is started, no further user interaction is required. If both the observer and designated standby database lose connectivity with the primary database for longer than the number of seconds specified by the `FastStartFailoverThreshold` configuration property, the observer will initiate a fast-start failover to the standby database. In addition, the primary database will shut down if it perceives a loss of connectivity for a period longer than `FastStartFailoverThreshold` seconds, if the `FastStartFailoverPmyShutdown` configuration property is set to `TRUE`. After the failover completes, the former primary database is automatically reinstated as a standby database when a connection to it is reestablished, if the `FastStartFailoverAutoReinstate` configuration property is set to `TRUE`.

> **Note:** When a fast-start failover occurs because either a user configurable fast-start failover condition is detected or an application initiates a fast-start failover by calling the `DBMS_DG.INITIATE_FS_FAILOVER` function, the former primary database is always shut down and never automatically reinstated. This is true regardless of the settings for the `FastStartFailoverPmyShutdown` and `FastStartFailoverAutoReinstate` configuration properties. See Section 5.5.2 for more information.

Figure 5–1 shows the relationships between the primary database, target standby database, and the observer during fast-start failover:

- **Before Fast-Start Failover:** Data Guard is operating in a steady state, with the primary database transmitting redo data to the target standby database and the observer monitoring the state of the entire configuration.
- **FastStart Failover Ensues:** Disaster strikes the primary database and its network connections to both the observer and the target standby database are lost. Upon detecting the break in communication, the observer attempts to reestablish a connection with the primary database for the amount of time defined by the `FastStartFailoverThreshold` property before initiating a fast-start failover. If the observer is unable to regain a connection to the primary database within the specified time, and the target standby database is ready for fast-start failover, then fast-start failover ensues.
- **After Fast-Start Failover:** The fast-start failover has completed and the target standby database is running in the primary database role. After the former primary database has been repaired, the observer reestablishes its connection to that database and reinstates it as a new standby database. The new primary database starts transmitting redo data to the new standby database.

Figure 5–1 Relationship of Primary and Standby Databases and the Observer

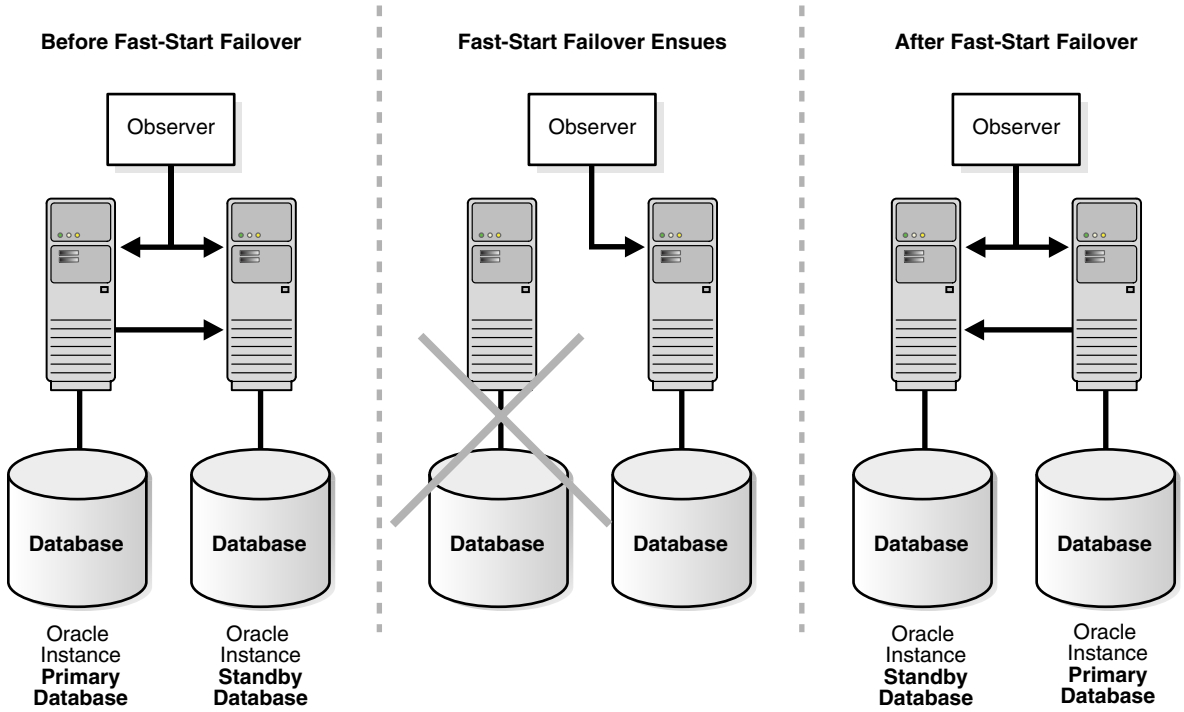

The following sections describe these topics:

- Prerequisites for Enabling Fast-Start Failover
- Enabling Fast-Start Failover
- Viewing Fast-Start Failover Configuration Statistics and Status
- Disabling Fast-Start Failover
- Performance Considerations for Fast-Start Failover
- Managing the Observer
- Reinstating the Former Primary Database in the Broker Configuration
- Shutting Down Databases In a Fast-Start Failover Environment

5.5.1 Prerequisites for Enabling Fast-Start Failover

The following prerequisites must be met before the broker allows you to enable fast-start failover:

- Ensure the broker configuration is operating in either maximum availability mode or maximum performance mode.

  See Section 4.6.1 for information about configuring the protection mode, standby redo logs, and the `LogXptMode` property.

- Ensure that the standby database you choose to be the target of fast-start failover has its `LogXptMode` property set to `SYNC` if you wish to enable fast-start failover in maximum availability mode, or to `ASYNC` if you wish to enable fast-start failover in maximum performance mode. The current primary database must have its `LogXptMode` property set accordingly and must have standby redo logs configured.

- Enable Flashback Database and set up a fast recovery area on both the primary database and the target standby database.

  See *Oracle Database Backup and Recovery User's Guide*.

- Install the DGMGRL command-line interface on the observer computer as described in Section 2.1.
- Configure the `TNSNAMES.ORA` file on the observer system so that the observer is able to connect to the primary database and the pre-selected target standby database.
- Create static service names so that the observer can automatically restart a database as part of reinstatement. See Section 2.2, "Prerequisites" for more information.

5.5.2 Enabling Fast-Start Failover

You can enable fast-start failover from any site while connected to any database in the broker configuration. Enabling fast-start failover does not trigger a failover. Instead, it allows the observer that is monitoring the configuration to initiate a fast-start failover should conditions warrant a failover.

Perform the following steps to enable fast-start failover and start the observer. The steps assume that you are connected as `SYS` and that a primary and standby database are already set up in a broker configuration.

Step 1 Determine which of the available standby databases is the best target for the failover.

Follow the guidelines described in Section 5.2, "Choosing a Target Standby Database".

Step 2 Specify the target standby database with the FastStartFailoverTarget configuration property.

You can specify only one target standby database when setting the `FastStartFailoverTarget` configuration property on the current primary database:

- If there is only one standby database in the configuration, you can skip this step and continue with Step 3. When enabling fast-start failover, the broker automatically sets the `FastStartFailoverTarget` property on the primary and standby databases to point to each other as their respective target during a failover.
- If there is more than one standby database in the configuration, you must explicitly set the `FastStartFailoverTarget` property on the primary database to select a target standby database. When enabling fast-start failover, the broker verifies that the property indicates an existing standby, and then reciprocally sets the standby database's `FastStartFailoverTarget` property to the primary database.

> **Note:** To change the `FastStartFailoverTarget` property to point to a different standby database, disable fast-start failover, set the `FastStartFailoverTarget` property, and reenable fast-start failover.

See Section 8.3.9, "FastStartFailoverTarget" for more information about this property.

Step 3 Determine the protection mode you want

Fast-start failover can be enabled for either maximum availability mode or maximum performance mode. If you cannot tolerate any loss of data, then ensure that the configuration protection mode is set to maximum availability. To do this, the `LogXptMode` database property for both the primary and target standby database must be set to `SYNC`. Then set the configuration protection mode to maximum availability. For example:

```
DGMGRL> EDIT DATABASE 'North_Sales' SET PROPERTY LogXptMode=SYNC;
DGMGRL> EDIT DATABASE 'South_Sales' SET PROPERTY LogXptMode=SYNC;
DGMGRL> EDIT CONFIGURATION SET PROTECTION MODE AS MaxAvailability;
```

If you are more concerned about the performance of the primary database than a minimal loss of data, consider enabling fast-start failover when the configuration protection mode is set to maximum performance. In this mode you will need to consider how much data loss is acceptable in terms of seconds and set the `FastStartFailoverLagLimit` configuration property accordingly. This property specifies the amount of data, in seconds, that the target standby database can lag behind the primary database in terms of redo applied. If the standby database's redo applied point is within that many seconds of the primary database's redo generation point, a fast-start failover will be allowed. The `FastStartFailoverLagLimit` configuration property is only used by the broker when enabling fast-start failover for configurations operating in maximum performance mode. The default value is 30 seconds and the lowest possible value is 10 seconds.

In addition to setting the configuration protection mode to maximum performance, you will also need to ensure that the `LogXptMode` database property for both the primary and target standby database is set to `ASYNC`. For example:

```
DGMGRL> EDIT DATABASE 'North_Sales' SET PROPERTY LogXptMode=ASYNC;
DGMGRL> EDIT DATABASE 'South_Sales' SET PROPERTY LogXptMode=ASYNC;
DGMGRL> EDIT CONFIGURATION SET PROTECTION MODE AS MaxPerformance;
DGMGRL> EDIT CONFIGURATION SET PROPERTY FastStartFailoverLagLimit=45;
```

Step 4 Set the FastStartFailoverThreshold configuration property.

Fast-start failover will occur if both the observer and the target standby database lose connection to the primary database for the period of time specified by the `FastStartFailoverThreshold` configuration property.

Set the `FastStartFailoverThreshold` property to specify the number of seconds you want the observer and target standby database to wait (after detecting the primary database is unavailable) before initiating a failover. For example:

```
DGMGRL> EDIT CONFIGURATION SET PROPERTY FastStartFailoverThreshold = 45;
```

The default value for the `FastStartFailoverThreshold` property is 30 seconds and the lowest possible value is 6 seconds. If you have an Oracle RAC primary database, consider specifying a higher value to minimize the possibility of a false failover in the event of an instance failure.

The time interval starts when the observer first loses its connection to the primary database. If the observer is unable to regain a connection to the primary database within the specified time, then the observer begins a fast-start failover provided the standby database is ready to fail over. Although the default value of 30 seconds is typically adequate for detecting outages and failures on most configurations, you can adjust failover sensitivity with this property to decrease the probability of false failovers in a temporarily unstable environment.

If the FastStartFailoverPmyShutdown configuration property is set to TRUE, the primary database will shut down after FastStartFailoverThreshold seconds has elapsed if redo generation has been stalled and the primary database is unable to reestablish connectivity with either the observer or target standby database.

Note that the FastStartFailoverThreshold property can be changed even when fast-start failover is enabled.

> **See Also:** Section 8.1.6 for reference information about the FastStartFailoverThreshold property

Step 5 Set other database properties (optional).

You can optionally set the database properties described in the following table:

Property Name	Description	Default Value
FastStartFailoverPmyShutdown	This configuration property causes the primary database to shut down if fast-start failover is enabled and V$DATABASE.FS_FAILOVER_STATUS indicates the primary has been STALLED for longer than FastStartFailoverThreshold seconds. A value of TRUE helps to ensure that an isolated primary database cannot satisfy user queries. This property cannot be used to prevent the primary database from shutting down if a fast-start failover occurred because a user configuration condition was detected or was requested by an application by calling the DBMS_DG.INITIATE_FS_FAILOVER function.	TRUE
FastStartFailoverLagLimit	This configuration property establishes an acceptable limit, in seconds, that the standby is allowed to fall behind the primary in terms of redo applied, beyond which a fast-start failover will not be allowed. The lowest possible value is 10 seconds. This property is used when fast-start failover is enabled and the configuration is operating in maximum performance mode.	30 seconds
FastStartFailoverAutoReinstate	This configuration property causes the former primary database to be automatically reinstated if a fast-start failover was initiated because the primary database was either isolated or had crashed. To prevent automatic reinstatement of the former primary database in these cases, set this configuration property to FALSE. The broker never automatically reinstates the former primary database if a fast-start failover was initiated because a user configuration condition was detected or was requested by an application calling the DBMS_DG.INITIATE_FS_FAILOVER function.	TRUE
ObserverConnectIdentifier	This database property is used to specify how the observer should connect to and monitor the primary and standby database. Set this property for the primary and target standby database if you want the observer to use a different connect identifier than that used to ship redo data (that is, the connect identifier specified by the DGConnectIdentifier property).	Observer uses the value of the DGConnectIdentifier property to connect to and monitor the primary and target standby databases.

Step 6 Enable additional fast-start failover conditions (optional)

By default, a fast-start failover is done when both the observer and the standby cannot reach the primary after the configured time threshold (`FastStartFailoverThreshold`) has passed.

You can optionally indicate the database health conditions that should cause fast-start failover to occur. These conditions are described in the following table:

Health Condition	Description	Enabled by Default
Datafile Offline	A datafile is offline because of a write error.	Yes
Corrupted Dictionary	Dictionary corruption of a critical database object. Currently, this state can be detected only when the database is open	Yes
Corrupted Controlfile	Controlfile is permanently damaged because of a disk failure.	Yes
Inaccessible Logfile	LGWR is unable to write to any member of the log group because on an I/O error	No
Stuck Archiver	Archiver is unable to archive a redo log because the device is full or unavailable.	No

In Oracle RAC configurations, the Inaccessible Logfile and Stuck Archiver health conditions may only be applicable to a single instance. Careful consideration should be given before enabling fast-start failover for either of these conditions because doing so will supersede availability options provided by Oracle Clusterware.

You can also specify errors raised by the Oracle server (ORA errors) as conditions for which fast-start failover should occur.

You can specify particular conditions for which a fast-start failover should occur using either Oracle Enterprise Manager or the DGMGRL `ENABLE FAST_START FAILOVER CONDITION` and `DISABLE FAST_START FAILOVER CONDITION` commands.

Step 7 Enable fast-start failover.

Use the Enterprise Manager Fast-Start Failover wizard or the DGMGRL `ENABLE FAST_START FAILOVER` command to enable fast-start failover. To enable fast-start failover, both the primary and target standby databases must be running and have connectivity, and satisfy all of the prerequisite conditions listed in Section 5.5.1.

Enable Fast-Start Failover Using Enterprise Manager

To enable fast-start failover in Enterprise Manager, use the Fast-Start Failover wizard. On the Data Guard Overview Page next to the "Fast-Start Failover" status field, click `Disabled` to invoke the Fast-Start Failover Page. Then, on the Fast-Start Failover Change Mode Page, click `Enabled`. Enterprise Manager will start the observer. Then, on the Fast-Start Failover Configure Page, select the standby database that should be the target of a failover. See Section 5.2, "Choosing a Target Standby Database" for helpful advice. This page will not allow you to alter the protection mode. Rather, fast-start failover will be enabled in accordance with the current protection mode. If the currently configured mode is maximum protection, Enterprise Manager will downgrade the mode to maximum availability.

Enable Fast-Start Failover Using DGMGRL

To enable fast-start failover with DGMGRL, issue the `ENABLE FAST_START FAILOVER` command while connected to any database in the broker configuration, including on the observer computer. For example:

```
DGMGRL> ENABLE FAST_START FAILOVER;
Enabled.
```

See Also:

- ENABLE FAST_START FAILOVER on page 7-30
- Section 6.6, "Scenario 5: Enabling Fast-Start Failover and Starting the Observer" on page 6-8

Note: Administration at the target standby site should be as comprehensive as that at the primary site because the standby database may assume the primary role without prior notice. Staff support, hardware and software, security (both software and site), network connections, and bandwidth should be equivalent at both sites.

Step 8 Start the Observer.

The primary database must be running in order to start the observer.

You can start the observer before or after you enable fast-start failover. If fast-start failover is already enabled, the observer immediately begins monitoring the status and connections to the primary and target standby databases. If fast-start failover is not already enabled, the observer waits until fast-start failover gets enabled and then begins monitoring.

Starting the Observer Using Enterprise Manager

If the Enterprise Manager agent is installed on the observer computer, it automatically starts the observer when you enable fast-start failover through Enterprise Manager. If the agent is not present, you must start the observer manually using the following instructions for the DGMGRL command-line interface.

Starting the Observer Using DGMGRL

To start the observer with DGMGRL, issue the following command on the observer computer:

```
DGMGRL> START OBSERVER;
```

The observer is a continuously executing process that is created when the `START OBSERVER` command is issued. Thus, the command-line prompt on the observer computer does not return until you issue the `STOP OBSERVER` command from another DGMGRL session. To issue commands and interact with the broker configuration, you must connect through another DGMGRL client session.

See the START OBSERVER command on page 7-55 for more information.

Step 9 Verify the fast-start failover environment.

To verify the readiness of the fast-start failover configuration, issue the DGMGRL `SHOW CONFIGURATION VERBOSE` command or the `SHOW FAST_START FAILOVER` command on the primary database. For example:

```
DGMGRL> SHOW FAST_START FAILOVER;
```

```
Fast-Start Failover: ENABLED
 Threshold:           60 seconds
 Target:              South_Sales
 Observer:            observer.example.com
 Lag Limit:           30 seconds (not in use)
 Shutdown Primary:    TRUE
 Auto-reinstate:      TRUE

Configurable Failover Conditions
 Health Conditions:
   Corrupted Controlfile          YES
   Corrupted Dictionary           YES
   Inaccessible Logfile            NO
   Stuck Archiver                  NO
   Datafile Offline               YES

 Oracle Error Conditions:
   (none)
```

The following sections provide more information about the fast-start failover environment:

- When Fast-Start Failover Is Enabled and the Observer Is Running
- Restrictions When Fast-Start Failover is Enabled
- Shutting Down the Primary Database When Fast-Start Failover Is Enabled
- Performing Manual Role Changes When Fast-Start Failover Is Enabled

5.5.2.1 When Fast-Start Failover Is Enabled and the Observer Is Running

Once you enable fast-start failover and start the observer, the observer continuously monitors the environment to ensure the primary database is available. This section lists the steps the observer takes to determine if a fast-start failover is needed and then to perform one, if necessary.

Step 1 Monitor the environment to ensure the primary database is available.

The observer waits the number of seconds specified by the `FastStartFailoverThreshold` configuration property before attempting a fast-start failover when the primary database has crashed or has lost connectivity with the observer, as in the following situations:

- The primary database loses its connections with both the observer and target standby database
- Instance failures

  If a single-instance primary database (either Oracle RAC or non-Oracle RAC), or if all instances of an Oracle RAC primary database fail, the observer attempts a fast-start failover.
- Shutdown abort

  If a single-instance primary database (either Oracle RAC or non-Oracle RAC), or if all instances of an Oracle RAC primary database are shut down with the `ABORT` option, the observer attempts a fast-start failover. Fast-start failover will not be attempted for the other types of database shutdown (`NORMAL`, `IMMEDIATE`, `TRANSACTIONAL`).

The observer never waits for the threshold to expire to perform a fast-start failover in the following situations:

- User-configurable condition

  If the observer determines that any of the user-configurable conditions has been detected, the observer attempts a fast-start failover.

- Application calls to `DBMS_DG.INITIATE_FS_FAILOVER`

  If an application has called this function and it has received a status of `SUCCESS`, the observer attempts a fast-start failover.

Step 2 Reconnect within the time specified by FastStartFailoverThreshold.

If the observer detects an availability problem with the primary database, the observer typically attempts to reconnect to the primary database within the time specified by the `FastStartFailoverThreshold` configuration property. The `FastStartFailoverThreshold` time interval starts when the observer first detects there might be a failure with the primary database.

The time interval specified by the `FastStartFailoverThreshold` property is ignored if the observer detects that a user-configurable condition has occurred or if a fast-start failover has been requested by the `DBMS_DG.INITIATE_FS_FAILOVER` function.

If the primary database is an Oracle Real Application Clusters (Oracle RAC) database, the observer will attempt to connect to one of the remaining primary instances. Fast-start failover will not occur unless all instances comprising the Oracle RAC primary database are perceived to have failed. The observer uses the value specified by either the `DGConnectIdentifier` or `ObserverConnectIdentifier` database properties to connect to the primary and fast-start failover target standby databases. The value specified for either of these properties should allow the observer to connect to any instance of an Oracle RAC database.

Step 3 Verify the target standby database is ready for failover.

If fast-start failover is initiated, the observer verifies the target standby database is ready to fail over to the primary database role.

Fast-start failover *cannot* occur if:

- Fast-start failover is no longer enabled
- The observer cannot connect to the target standby database

  See Also: Section 5.5.7.3, "What Happens if the Observer Fails?" if the observer is not running

- The observer and the target standby database are inconsistent with regard to the current state of the broker configuration
- The observer is not running
- If the protection mode is maximum availability and the target standby database was not synchronized with the primary database at the time the primary database failed
- If the protection mode is maximum performance and the apply point of the target standby database lags the redo generation point of the primary database by more than the amount specified by the `FastStartFailoverLagLimit` configuration property at the time the primary database failed
- The target standby database has contact with the primary database

- The FS_FAILOVER_STATUS column in the V$DATABASE view for the target standby database displays a reason why fast-start failover cannot occur
- A manual failover is already in progress. See Section 5.4 for complete information about manual failovers.
- The primary database was shut down without using the ABORT option

Step 4 Initiate a fast-start failover.

If the target standby database is ready for failover, the observer immediately directs the target standby database to fail over to the primary database role. If failover is not possible for some reason, the observer will continue checking whether the standby database is ready to fail over. But it will also continue trying to reconnect to the primary database indefinitely. If it reconnects to the primary database before the standby agrees to fail over, the observer will stop attempting to initiate a fast-start failover.

Step 5 Reinstate the former primary database as a new standby database.

After the fast-start failover completes successfully, the observer will attempt to reinstate the former primary database as a new standby database when a connection to the former primary database is reestablished, and the FastStartFailoverAutoReinstate configuration property is set to TRUE. If the FastStartFailoverPmyShutdown configuration property is set to TRUE, the former primary database will have been automatically shut down and must be manually restarted before the observer can attempt to reinstate it.

Note that these properties only affect whether primary shutdown and automatic reinstatement are performed if a fast-start failover occurs because the primary crashed or was isolated from the observer and target standby database.

> **See Also:** Section 5.5.8 for more information about reinstatement

5.5.2.2 Restrictions When Fast-Start Failover is Enabled

When fast-start failover is enabled, you cannot:

- Change:
  - The configuration protection mode
  - The LogXptMode database property on the primary or target standby databases
  - The FastStartFailoverTarget configuration property on the primary or target standby databases
- Disable or delete:
  - The broker configuration
  - The standby database that is the target of fast-start failover
- Perform a manual failover:
  - Unless the conditions listed in Section 5.5.2.4 have been met
  - To a standby database that is not configured as the fast-start failover target

  To determine if the configuration is ready for fast-start failover to occur, issue the DGMGRL SHOW DATABASE <target-standby-database> command, or query the V$DATABASE view on either the primary or target standby databases. The column value for V$DATABASE.FS_FAILOVER_STATUS will be

SYNCHRONIZED in a configuration operating in maximum availability mode, and it will be TARGET UNDER LAG LIMIT in a configuration operating in maximum performance mode when ready to fast-start failover. The FS_FAILOVER_OBSERVER_PRESENT column displays YES for the target standby database.

- Perform a switchover to a standby database that is not configured as the fast-start failover target
- Perform a switchover to the target standby database in a configuration operating in maximum availability mode, unless the standby database is synchronized with the primary database
- Perform a switchover to the target standby database in a configuration operating in maximum performance mode, unless the standby database is within the lag limit of the primary database
- Attempt to open the primary database, or the following error may be returned:

  ```
  ORA-16649: possible failover to another database prevents this database from
  being opened
  ```

  This error may return if the fast-start failover validity check fails or does not complete in under two minutes.

5.5.2.3 Shutting Down the Primary Database When Fast-Start Failover Is Enabled

Fast-start failover will not be triggered if the primary or standby database is shut down normally (using SHUTDOWN NORMAL, SHUTDOWN IMMEDIATE, or SHUTDOWN TRANSACTIONAL). A normal shutdown will prevent fast-start failover until the primary database and standby database are connected and communicating again.

5.5.2.4 Performing Manual Role Changes When Fast-Start Failover Is Enabled

If fast-start failover is enabled you can still perform a switchover or a manual failover as long as the following conditions are met:

- The role change is directed to the same standby database that was specified with the FastStartFailoverTarget configuration property.
- The target standby database is synchronized with the primary database if it is a configuration operating in maximum availability mode, or the target standby database is within the lag limit if it is a configuration operating in maximum performance mode.
- For manual failover, the observer is started and communicating with the target standby database. You must ensure that the primary database is shut down prior to performing a manual failover.

Note: You can disable fast-start failover if necessary, by using the FORCE option. See Section 5.5.5, "Disabling Fast-Start Failover".

See Also: Section 5.3 and Section 5.4 for more information about switchovers and manual failovers, respectively

5.5.3 Directing a Fast-Start Failover From an Application

You can use the DBMS_DG PL/SQL package to allow an application to direct a fast-start failover when it encounters specific conditions. When a serious condition uniquely known to the application is detected, it may call the DBMS_DG.INITIATE_

FS_FAILOVER function, thus alerting the primary database that it wants a fast-start failover to occur immediately. The primary database will notify the observer of this and the observer will immediately initiate a fast-start failover, assuming the standby is ready for failover. Once the observer has initiated a fast-start failover, the primary database will shut down automatically. The observer will not attempt to reinstate the former primary database.

If the configuration is not failable, the DBMS_DG.INITIATE_FS_FAILOVER function will return an ORA error number (not signal an exception) informing the caller that a fast-start failover could not be performed.

Note: The application should use caution when calling this function because the observer will initiate failover to the target standby database.

See Also: *Oracle Database PL/SQL Packages and Types Reference* for more information about the DBMS_DG package

5.5.4 Viewing Fast-Start Failover Configuration Statistics and Status

To verify the observer is started and the configuration is ready for fast-start failover, you can issue the DGMGRL SHOW DATABASE <target-standby-database> command or query the V$DATABASE view on the target standby database.

You can also query the V$FS_FAILOVER_STATS view to display statistics about fast-start failover occurring on the system.

The rest of this section provides examples of using DGMGRL SHOW commands to display fast-start failover information and includes sections describing the following views:

- V$DATABASE View
- V$FS_FAILOVER_STATS View

Example 1 SHOW FAST-START FAILOVER

The DGMGRL SHOW FAST-START FAILOVER command displays all the fast-start failover related information. For example:

```
DGMGRL> SHOW FAST_START FAILOVER;

Fast-Start Failover: ENABLED
 Threshold:           60 seconds
 Target:              South_Sales
 Observer:            observer.example.com
 Lag Limit:           30 seconds (not in use)
 Shutdown Primary:    TRUE
 Auto-reinstate:      TRUE

Configurable Failover Conditions
 Health Conditions:
   Corrupted Controlfile          YES
   Corrupted Dictionary           YES
   Inaccessible Logfile            NO
   Stuck Archiver                  NO
   Datafile Offline               YES

 Oracle Error Conditions:
```

```
   (none)
```

Example 2 SHOW CONFIGURATION VERBOSE

The following example shows the fast-start failover information for the DRSolution configuration:

```
DGMGRL> SHOW CONFIGURATION VERBOSE;

Configuration - DRSolution

  Protection Mode: MaxAvailability
  Databases:
    North_Sales  - Primary database
    South_Sales  - (*) Physical standby database

  (*) Fast-Start Failover target

  Properties:
    FastStartFailoverThreshold      = '60'
    OperationTimeout                = '30'
    FastStartFailoverLagLimit       = '30'
    CommunicationTimeout            = '180'
    FastStartFailoverAutoReinstate  = 'TRUE'
    FastStartFailoverPmyShutdown    = 'TRUE'
    BystandersFollowRoleChange      = 'ALL'

Fast-Start Failover: ENABLED

  Threshold:        180 seconds
  Target:           South_Sales
  Observer:         observer.example.com
  Lag Limit:        30 seconds (not in use)
  Shutdown Primary: TRUE
  Auto-reinstate:   TRUE

Configuration Status:
SUCCESS
```

5.5.4.1 V$DATABASE View

You can query the `V$DATABASE` view to verify that the observer is started and the configuration is ready for fast-start failover. When querying the `V$DATABASE` view, pay special attention to the following:

- The `FS_FAILOVER_STATUS` column, which can contain the values described in Table 5–1. Note that if the `V$DATABASE.FS_FAILOVER_STATUS` column has a value of `DISABLED`, then any values returned for the remaining columns related to fast-start failover (`V$DATABASE.FS_FAILOVER_*`) become irrelevant.
- The `FS_FAILOVER_OBSERVER_PRESENT` column, which indicates whether the observer is running and actively pinging the database.

Table 5–1 FS_FAILOVER_STATUS Column of the V$DATABASE View

Column Value	Description	Fast-Start Failover ...
`BYSTANDER`	Fast-start failover is enabled, but this standby database is not the target of the fast-start failover. The database cannot provide fast-start failover status information.	Is enabled
`DISABLED`	Fast-start failover is disabled.	Is not possible

Table 5–1 (Cont.) FS_FAILOVER_STATUS Column of the V$DATABASE View

Column Value	Description	Fast-Start Failover ...
LOADING DICTIONARY	Displays only on a logical standby database that has not yet completed loading a copy of the primary database's data dictionary.	Is not possible
PRIMARY UNOBSERVED	Displays only on the target standby database when it is SYNCHRONIZED with or is TARGET UNDER LAG LIMIT of the primary database, has connectivity to the observer, but the primary database does not have a connection to the observer.	Is not possible
REINSTATE FAILED	Reinstatement of the failed primary database as a new standby database failed. See Section 9.1 for details about the broker's drc* log files.	Has completed
REINSTATE REQUIRED	The failed primary database requires reinstatement as a new standby database to the new primary. The observer automatically starts the reinstatement process. REINSTATE REQUIRED is present only after fast-start failover has occurred and shows on both the new primary database and the database undergoing reinstatement. This is cleared on both when the reinstatement has been completed.	Has completed
STALLED	Displays on the primary database after loss of connectivity to the target standby database and the change to the UNSYNCHRONIZED state (maximum availability mode) or to the TARGET OVER LAG LIMIT state (maximum performance mode) cannot be confirmed by either the target standby database or the observer. Note that the value of the FastStartFailoverPmyShutdown configuration property must be FALSE for the primary to stall indefinitely under these conditions. With a value of TRUE for this property, the primary will shut down after being stalled for the number of seconds specified by the FastStartFailoverThreshold property. It shuts down or stalls because it is likely a failover has occurred. **Note**: this state also occurs on the primary during startup when fast-start failover is possible and neither the target standby database nor the observer are present to confirm it is okay to continue opening the database.	Is possible
TARGET OVER LAG LIMIT	Displays if the standby database's redo applied point lags the primary database's redo generation point by more than the number of seconds specified by the FastStartFailoverLagLimit configuration property and the configuration is operating in maximum performance mode.	Is not possible

Table 5–1 (Cont.) FS_FAILOVER_STATUS Column of the V$DATABASE View

Column Value	Description	Fast-Start Failover ...
TARGET UNDER LAG LIMIT	Displays if the standby database's redo applied point does not lag the primary database's redo generation point by more than the number of seconds specified by the FastStartFailoverLagLimit configuration property and the configuration is operating in maximum performance mode.	Is possible
SUSPENDED	Displays only on the target standby database when either the primary or target standby database was shut down in a controlled fashion (using the NORMAL, IMMEDIATE, or TRANSACTIONAL, options, but not the ABORT option). Fast-start failover is inhibited in this case. SUSPENDED is cleared when connectivity with the primary database is restored.	Is not possible
SYNCHRONIZED	Displays when the primary and target standby databases are synchronized and the configuration is operating in maximum availability mode.	Is possible if the target standby database displays SYNCHRONIZED and the FS_FAILOVER_OBSERVER_PRESENT column displays YES
UNSYNCHRONIZED	Displays when the target standby database does not have all of the primary database redo data and the configuration is operating in maximum availability mode.	Is not possible

5.5.4.2 V$FS_FAILOVER_STATS View

Because fast-start failovers are fully automated and can occur at any time, it is useful to query this view on the primary database to display statistics about fast-start failovers that have occurred on the system, including:

- LAST_FAILOVER_TIME that shows the timestamp of last fast-start failover
- LAST_FAILOVER_REASON that shows the reason for the last fast-start failover

The following is an example of querying the V$FS_FAILOVER_STATS view:

```
SQL> SELECT LAST_FAILOVER_TIME, LAST_FAILOVER_REASON FROM V$FS_FAILOVER_STATS;

LAST_FAILOVER_TIME
-------------------
LAST_FAILOVER_REASON
--------------------------------------------------------------------------------
-------------------------------------------------
02/13/2007 16:53:10
Primary Disconnected
```

5.5.5 Disabling Fast-Start Failover

Disabling fast-start failover prevents the observer from initiating a failover to the target standby database. In this case, manual failover may still be possible. See Section 5.4 for information about manual failover.

> **Note:** Disabling fast-start failover does not stop the observer. To stop the observer, see Section 5.5.7.4, "Stopping the Observer".

To disable fast-start failover, use the Fast-Start Failover wizard in Enterprise Manager or the DGMGRL `DISABLE FAST_START FAILOVER [FORCE]` command. The `FORCE` option disables fast-start failover on the database to which you are connected even when errors occur. Whether or not you need the `FORCE` option depends mostly on if the primary and target standby database have network connectivity:

- If the primary and target standby database have network connectivity, and the database to which you are connected has network connectivity with the primary database, the `FORCE` option has no effect. Simply use `DISABLE FAST_START FAILOVER`. This method will disable fast-start failover on all databases in the broker configuration.

  If errors occur during the disable operation, the broker returns an error message and stops the disable operation.

- If the primary and target standby databases do not have network connectivity or if the database to which you are connected does not have network connectivity with the primary database, consider using `DISABLE FAST_START FAILOVER` *with* the `FORCE` option.

  The broker may not be able to disable fast-start failover on all databases in the broker configuration when you issue the `DISABLE FAST_START FAILOVER FORCE` command. As a result, there is no guarantee that the observer will not perform a fast-start failover to the target standby database if the observer determines that conditions warrant a failover. The following list indicates the extent to which fast-start failover is disabled in the broker configuration when the `DISABLE FAST_START FAILOVER FORCE` command is issued on the primary database, target standby database, and a standby database that is not the fast-start failover target.

  If you issue this command on:

  – The target standby database when it does not have connectivity with the primary database, fast-start failover is disabled only on the target standby database. In this case, the observer cannot perform a fast-start failover even if conditions warrant a failover. Disabling fast-start failover with the `FORCE` option when connected to the target standby database guarantees that fast-start failover will not occur.

    When the primary database and the target standby database regain network connectivity, the broker will disable fast-start failover for the entire broker configuration.

  – The primary database, it attempts to disable fast-start failover on as many databases in the configuration with which it has a network connection. If the primary database does not have connectivity with the target standby database, fast-start failover remains enabled on the target standby database and the observer may still attempt a fast-start failover if conditions warrant a failover.

    Caution: This action may result in two databases in the configuration simultaneously assuming the primary database role should fast-start failover occur. For this reason, you should first issue this command on the target standby database.

  – Another standby database that does not have connectivity with the primary database, fast-start failover is disabled for this database. Because fast-start failover was not disabled on the target standby database, the observer may

still attempt a fast-start failover to the target standby database should conditions warrant a failover.

When the primary database and the (non-target) standby database regain network connectivity, the broker will propagate its current fast-start failover setting (`ENABLED` or `DISABLED`) to the non-target standby.

Caution: When you are experiencing network disconnections and you issue the `DISABLE FAST_START FAILOVER FORCE` command on the primary database or a standby database that does not have connectivity with the primary database, fast-start failover may not be disabled for all databases in the broker configuration. As a result the observer may still initiate fast-start failover to the target standby database, if conditions warrant a failover. This may result in two databases in the configuration simultaneously assuming the primary database role.

Conditions Requiring the FORCE Option

Disabling fast-start failover without the `FORCE` option can succeed only if the database on which the command is issued has a network connection with the primary database and if the primary database and target standby database have a network connection. This is the recommended method for disabling fast-start failover.

However, there may be situations in which you must disable fast-start failover when the primary database and the target standby database do not have a network connection, or the database on which you issued the disable fast-start failover command does not have a network connection to the primary database. In cases where there is a lost network connection, be aware that the observer may attempt a fast-start failover to the target standby database if conditions warrant a failover.

The `FORCE` option may be the preferred method for disabling fast-start failover when:

- A network outage isolates the primary database from the observer and the target standby database before conditions exist that warrant a failover.

  In this case, the primary database stalls and prevents any further transactions from committing because a fast-start failover may have occurred while it was isolated. If you expect the network to be disconnected for a long time and you need to make the primary database available, first confirm that a fast-start failover has not occurred to the target standby database. Then, disable fast-start failover with the `FORCE` option on the primary database.

  If possible, confirm that fast-start failover has not occurred to the target standby database prior to disabling fast-start failover with the `FORCE` option on the primary database.

  Caution: This action may result in two databases in the configuration simultaneously assuming the primary database role. This can be avoided by first disabling fast-start failover with the `FORCE` option on the target standby.

- You want to conduct a manual failover to any standby database in the configuration (for example, because a failure occurred on the primary database at a time when the primary and target standby database were not ready to failover).

In this case fast-start failover cannot occur because the databases are not ready to failover. You cannot perform a manual failover to the target standby database for the same reason. To proceed, you must first disable fast-start failover using the `FORCE` option, and then perform a manual failover.

> **Caution:** This action will result in loss of data and the possibility of two databases in the configuration simultaneously assuming the primary database role. This can be avoided by first disabling fast-start failover with the `FORCE` option on the target standby.

- A fast-start failover to the target standby database fails.

  If the failover fails for any reason, it could leave the target standby database inoperable, regardless of whether the target standby database is ready to failover. If there is another standby database that is available for failover, you can perform a manual failover to that standby database after you first disable fast-start failover using the `FORCE` option on that standby database.

- You want to prevent fast-start failover from occurring because the primary database will resume service soon.

  In this case, disable fast-start failover using the `FORCE` option on the target standby database. Once the primary database regains connectivity with the target standby database, fast-start failover will be disabled for all the databases in the configuration.

Disabling Fast-Start Failover Using Enterprise Manager

Click **Disable** in the Fast-Start Failover wizard. Then, click **Continue** to proceed to the next page. See the Enterprise Manager online Help system for more information.

Disabling Fast-Start Failover Using DGMGRL

Issue the `DISABLE FAST_START FAILOVER` command or the `DISABLE FAST_START FAILOVER FORCE` command. See the "DISABLE FAST_START FAILOVER" command in Chapter 7 for more information.

5.5.6 Performance Considerations for Fast-Start Failover

Consider the following recommendations to obtain better performance when using fast-start failover:

- The failover time is dependent upon whether the target standby database (physical or logical standby database) has applied all of the redo data it has received from the primary database.
- Enabling fast-start failover in a configuration operating in maximum performance mode provides better overall performance on the primary database because redo data is sent asynchronously to the target standby database. Note that this does not guarantee no data will be lost.
- Fast-start failover is faster when you take steps to optimize recovery so that the application of redo data to the standby database is kept up to date with the primary database's rate of redo application. To optimize the log apply rate:
  - Do not configure the `DelayMins` database property to delay applying archived redo log files to the standby database (see Section 4.5 for more information).

  - See *Oracle Data Guard Concepts and Administration* for information about tuning the log apply rate for a physical standby database.
  - See the *Oracle Maximum Availability Architecture* white papers at:

    http://www.oracle.com/goto/maa

- When setting the `FastStartFailoverLagLimit` configuration property, consider these tradeoffs between performance and potential data-loss:
  - A low lag limit will minimize data loss but may impact the performance of the primary database.
  - A high lag limit may lead to more data loss but may lessen the performance impact of the primary database.

5.5.7 Managing the Observer

The observer is integrated in the DGMGRL client-side component of the broker and typically runs on a different computer from the primary or standby databases and from the computer where you manage the broker configuration. The observer continuously monitors the fast-start failover environment to ensure the primary database is available (described in Section 5.5.2.1). The observer's main purpose is to enhance high availability and *lights out* computing by reducing the human intervention required by the manual failover process that can add minutes or hours to downtime.

You can manage the observer through either the Data Guard Overview pages in Oracle Enterprise Manager or using DGMGRL commands. Figure 5–2 shows the observer monitoring a fast-start failover configuration.

Figure 5–2 The Observer in the Fast-Start Failover Environment

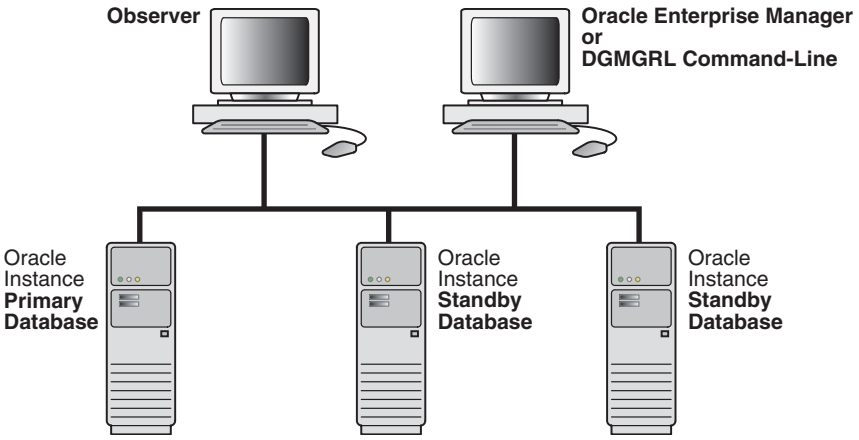

The following sections provide information about managing the observer:

- Installing and Starting the Observer
- Viewing Information About the Observer
- What Happens if the Observer Fails?
- Stopping the Observer
- Moving the Observer to Another Computer
- How the Observer Maintains Fast-Start Failover Configuration Information

5.5.7.1 Installing and Starting the Observer

The observer should be installed and run on a computer system that is separate from the primary and standby systems. Installing and starting the observer is an integral part of using fast-start failover and is described in detail in these sections:

- Section 2.1 describes installing Oracle Database Enterprise Edition or Oracle Personal Edition on the observer system.
- Section 5.5.2 describes how to start the observer as a part of the step-by-step process to enable fast-start failover. Examples of starting the observer using DGMGRL are included in Section 6.6.

There can be only one observer monitoring the broker configuration. If you attempt to start another one, the broker returns the following error message:

```
ORA-16647: could not start more than one observer
```

To start the observer, you must be able to log in to DGMGRL with an account that has the SYSDBA privilege. The observer is an OCI client that connects to the primary and target standby databases using the same `SYS` credentials you used when you connected to the Data Guard configuration with DGMGRL.

You must use DGMGRL release 11.2 to observe Oracle databases running release 11.2.

5.5.7.2 Viewing Information About the Observer

You can find information about the observer by querying the following columns in the `V$DATABASE` view:

- `FS_FAILOVER_OBSERVER_HOST` shows the name of the computer on which the observer is running
- `FS_FAILOVER_OBSERVER_PRESENT` shows whether or not the observer is connected to the local database

Table 5–2 FS_FAILOVER_OBSERVER_PRESENT Column of the V$DATABASE View

Column Value[1]	Description
`YES`	Observer is currently connected to the local database
`NO`	Observer is not connected to the local database

[1]This value is consistent across instances in an Oracle Real Applications Clusters (Oracle RAC) environment. That is, if the observer is connected to any instance in the Oracle RAC, all instances will show a value of `YES`.

For example, to determine if fast-start failover can occur, the `FS_FAILOVER_STATUS` column displays either `SYNCHRONIZED` or `TARGET UNDER LAG LIMIT` and the `FS_FAILOVER_OBSERVER_PRESENT` column displays `YES` for the target standby database. For example:

Database	FS_FAILOVER_STATUS	Protection Mode	FS_FAILOVER_OBSERVER_PRESENT
Primary	`SYNCHRONIZED`	Maximum Availability	`YES`
Standby	`SYNCHRONIZED`	Maximum Availability	`YES`
Primary	`TARGET UNDER LAG LIMIT`	Maximum Performance	`YES`

Database	FS_FAILOVER_STATUS	Protection Mode	FS_FAILOVER_OBSERVER_PRESENT
Standby	TARGET UNDER LAG LIMIT	Maximum Performance	YES

In the following example, assume the network between the primary database and the observer has failed. In this case, the FS_FAILOVER_STATUS and FS_FAILOVER_OBSERVER_PRESENT columns will appear as shown in the following table and fast-start failover will not occur:

Database	FS_FAILOVER_STATUS	FS_FAILOVER_OBSERVER_PRESENT
Primary	SYNCHRONIZED	NO
Standby	PRIMARY UNOBSERVED	YES

5.5.7.3 What Happens if the Observer Fails?

If the primary and target standby databases stay connected but the connection to the observer is lost, then the broker reports that the configuration is not observed. The configuration and database status report that the observer is not running and return one of the following status messages:

```
ORA-16658: unobserved fast-start failover configuration
ORA-16820: fast-start failover observer is no longer observing this database
```

While the configuration is in the unobserved state, fast-start failover cannot happen. Therefore, the primary database can continue processing transactions, even if the target standby database fails. The configuration status returns the SUCCESS status after the observer reestablishes its connection to the primary database, which then notifies the target standby database.

> **See Also:** Section 5.5.4, "Viewing Fast-Start Failover Configuration Statistics and Status"

5.5.7.4 Stopping the Observer

You may want to stop the observer when you no longer want to use fast-start failover (see Section 5.5.5, "Disabling Fast-Start Failover") or if you want to move the observer to a different host machine (see Section 5.5.7.5, "Moving the Observer to Another Computer").

To stop the observer when fast-start failover *is enabled*, the primary database and target standby database must be connected and communicating with each other. Stopping the observer does not disable fast-start failover. However, fast-start failover cannot occur when the target standby database is in the unobserved state.

To stop the observer when fast-start failover *is enabled*, but the primary and standby are isolated from each other, you must first disable fast-start failover by using the FORCE option, and then stop the observer. (See Section 5.5.5, "Disabling Fast-Start Failover" for important considerations when using the FORCE option.)

To stop the observer when fast-start failover *is not enabled*, the primary database must be running.

You can stop the observer while connected to any database in the broker configuration that has network connectivity to the primary database, as follows:

- Using Enterprise Manager

Choose the **Stop Observer** option on the first page of the fast-start failover wizard and click **Continue** at the bottom of the page. See the Enterprise Manager online help system for more information.

- Using DGMGRL

  Issue the following command:

  ```
  DGMGRL> STOP OBSERVER;
  ```

  See the STOP OBSERVER command on page 7-60 for more information.

> **Note:** The observer does not stop immediately when you issue the `STOP OBSERVER` command. After the broker receives the `STOP OBSERVER` request, the request is passed to the observer the next time the observer contacts the broker, and the observer then stops itself.

5.5.7.5 Moving the Observer to Another Computer

To move the observer to another computer:

1. Stop the observer from any computer system in the broker configuration, as described in Section 5.5.7.4.
2. Start the observer on the new computer system, as described in Step 8 of Section 5.5.2.

There is no need to disable fast-start failover when you move the observer.

5.5.7.6 How the Observer Maintains Fast-Start Failover Configuration Information

The observer persistently maintains information about the fast-start failover configuration in a binary file created in the working directory where you started the observer. By default, the observer creates this file in the current working directory when it is started and names the file `fsfo.dat`. This file contains connect identifiers to both the primary and the target standby databases.

Ensure this file cannot be read by unauthorized users.

Once the observer is started, you cannot change the file's name and location. However, you can change the name or the location of the file if you start the observer using the DGMGRL `START OBSERVER` command and include the `FILE` qualifier. See the START OBSERVER command on page 7-55 for more information.

> **Note:** If the observer is stopped abnormally (for example, by typing `CTRL/C`), restart it and reference the existing `fsfo.dat` file with the `FILE` qualifier.

If you want to use one Oracle home to start multiple observers, with each observer monitoring a different fast-start failover configuration, use the `FILE` qualifier to specify a unique observer configuration file location for each configuration to be monitored. If you want to capture any logging generated by the observer, use the `LOGFILE` option and ensure that file name is unique as well. For example:

```
% dgmgrl -logfile $ORACLE_HOME/rdbms/log/config1.log
DGMGRL> CONNECT /@primary1;
DGMGRL> START OBSERVER FILE=$ORACLE_HOME/dbs/config1.dat;

% dgmgrl -logfile $ORACLE_HOME/rdbms/log/config2.log
```

```
DGMGRL> CONNECT /@primary2;
DGMGRL> START OBSERVER FILE=$ORACLE_HOME/dbs/config2.dat;
```

5.5.8 Reinstating the Former Primary Database in the Broker Configuration

If a fast-start failover was initiated because the primary database had crashed or lost connectivity with the observer and target standby database, the observer automatically attempts to *reinstate* the former primary database as a standby database, if the `FastStartFailoverAutoReinstate` configuration property is set to `TRUE`. **Reinstatement** restores high availability to the broker configuration so that, in the event of a failure of the new primary database, another fast-start failover can occur. The reinstated database acts as the fast-start failover target for the new primary database, making a subsequent fast-start failover possible. The new standby database is a viable target of a failover when it begins receiving redo data received from the new primary database.

To allow the observer to automatically reinstate the former primary database, the database must be started and mounted, but it cannot be opened. The observer will restart the former primary database to the mounted state if it is open, prior to reinstating the database. The broker reinstates the database as a standby database of the same type as the former standby database of the new primary database.

If the former primary database cannot be reinstated automatically, you can manually reinstate it using either the DGMGRL `REINSTATE` command or Enterprise Manager. Step-by-step instructions for manual reinstatement are described in Section 5.4.3.

5.5.8.1 Requirements

Reinstatement is supported only after failover in a broker configuration. It also requires Flashback Database to be enabled on both the primary and target standby databases. Section 5.5.1 provides complete information about all of the fast-start failover and reinstatement requirements.

5.5.8.2 Restrictions on Reinstatement

The broker cannot automatically reinstate the former primary database if:

- A fast-start failover occurred because a user-configurable condition was detected or was requested by an application by calling the `DBMS_DG.INITIATE_FS_FAILOVER` function.
- `FastStartFailoverAutoReinstate` is set to `FALSE`
- Another failover or switchover occurred *after* the fast-start failover completed but *before* the former primary database restarted
- Fast-start failover was disabled
- The observer cannot connect to the former primary database
- The former primary database cannot connect to the new primary database
- The former primary database and the new primary database are not configured in the same fast-start failover environment
- The former primary database was disabled because of a manual failover when fast-start failover was disabled

> **Note:** Standby databases that are disabled during switchover, manual failover, or fast-start failover will not be automatically reinstated.

If automatic reinstatement fails, the broker will log errors and the former primary database will remain in the mounted state. At this point, you can either:

- Disable fast-start failover (described in Section 5.5.5) and attempt to open the former primary database
- Manually reinstate the former primary database, as described in Section 5.4.3

5.5.8.3 How the Broker Handles a Failed Reinstatement

If a failure occurs once a reinstatement operation (automatic or manual) is underway, the broker logs the appropriate information in the broker configuration files and broker log files. The former primary database is disabled. Most in-progress failures cannot be restarted (for example, archived redo log file corruption on the primary database). You must manually re-create the database as a standby database and then reenable it.

> **See Also:** Section 5.4.3.2, "How to Re-create and Reenable a Disabled Database"

5.5.9 Shutting Down Databases In a Fast-Start Failover Environment

Perform the following steps if you need to shut down the primary or standby databases:

1. Stop the observer and wait for the `FS_FAILOVER_OBSERVER_PRESENT` column in the `V$DATABASE` fixed view to contain the value "`NO`" for both the primary and target standby databases. This ensures that a fast-start failover will not occur while you are shutting down the primary database.
2. Shut down the primary database and the target standby database using either DGMGRL `SHUTDOWN` command or the SQL*Plus `SHUTDOWN` statement.

When restarting the databases, you may restart them in any order. When both databases have been restarted, you may restart the observer.

5.6 Database Client Considerations

This section describes the event notification and database connection failover support that is available to database clients when a broker-managed failover occurs.

After a failover, the broker publishes Fast Application Notification (FAN) events. These FAN events can be used in the following ways:

- Applications can use FAN without programmatic changes if they use one of these Oracle integrated database clients: Oracle Database JDBC, Oracle Database Oracle Call Interface (OCI), and Oracle Data Provider for .NET (ODP.NET). These clients can be configured for Fast Connection Failover (FCF) to automatically connect to a new primary database after a failover.
- JAVA applications can use FAN programmatically by using the JDBC FAN application programming interface to subscribe to FAN events and to execute event handling actions upon the receipt of an event.
- FAN server-side callouts can be configured on the database tier.

FAN events are published using Oracle Notification Services (ONS) and Oracle Streams Advanced Queuing (AQ).

Note: A single-instance database must be registered with Oracle Restart in order to publish FAN events via ONS.

See Also:

- *Oracle Real Application Clusters Administration and Deployment Guide* for more information about configuring FAN, FCF, and ONS on an Oracle Real Application Clusters (Oracle RAC) database
- *Oracle Database Administrator's Guide* for information about configuring Oracle Restart, FAN, FCF, and ONS on a single-instance database

5.6.1 Data Guard Specific FAN and FCF Configuration Requirements

This section describes configuration requirements that must be met in order to publish and properly handle FAN events generated as the result of a broker-managed failover.

These requirements are supplemental to those described in the documents previously referenced and in the following client-specific guides:

- *Oracle Database JDBC Developer's Guide*
- *Oracle Call Interface Programmer's Guide*
- *Oracle Data Provider for .NET Developer's Guide*

5.6.1.1 Oracle Net Configuration Requirements

For FCF to occur, a client must be able to locate the new primary database after a failover. This section describes how to configure an Oracle Net connect descriptor that meets this requirement.

The connect descriptor can be configured in one of two ways:

1. Configure the connect descriptor for connect-time failover. Add the primary database and each standby database to the address list. Set the `CONNECT_TIMEOUT` parameter to a small value to minimize the delay experienced if a network address is not available. Increase the value of this parameter if resource contention causes connection timeouts to occur during normal operation.

   For example:

   ```
   sales =
     (DESCRIPTION=
       (FAILOVER=ON)
       (CONNECT_TIMEOUT=5)
       (ADDRESS_LIST=
         (ADDRESS=(HOST=boston-scan)(PORT=1521))
         (ADDRESS=(HOST=dallas-scan)(PORT=1521)))
       (CONNECT_DATA=(SERVICE_NAME=sales)))
   ```

2. Configure the connect descriptor with a single network name that is registered with a global naming service such as DNS or LDAP. Create a trigger based on the `DB_ROLE_CHANGE` system event that changes the network address associated with the network name to the network address of the new primary database after a failover.

See Also:

- *Oracle Database PL/SQL Language Reference* for more information about the DB_ROLE_CHANGE system event

The connect descriptor must contain the SERVICE_NAME parameter in either case.

5.6.1.2 Database Service Configuration Requirements

Database services can be configured to be active in specific database roles on Oracle RAC databases and on single-instance databases managed by Oracle Restart. The broker interacts with Oracle Clusterware or Oracle Restart to ensure that the appropriate services are active and that the appropriate FAN events are published after a role change.

FAN events are always published through ONS. Services can also be configured so that FAN events are also published through Advanced Queuing (AQ). You must explicitly enable FAN event publication through AQ if you have either OCI or ODP.NET clients because that is the FAN event notification mechanism that those clients use.

Services must be created identically, using the Server Control (SRVCTL) utility, at all databases in a Data Guard configuration.

In the following example, a service named payroll is configured to be active in the primary database role on the primary database North_Sales. The service is then configured to be active in the primary database role on the standby database South_Sales, so that it will be active on that database if a role transition occurs. FAN event notification through AQ is also enabled.

```
srvctl add service -d North_Sales -s payroll -l PRIMARY -q TRUE -e SELECT -m BASIC
-w 10 -z 150

srvctl add service -d South_Sales -s payroll -l PRIMARY -q TRUE -e SELECT -m BASIC
-w 10 -z 150
```

In the next example, a service named sales is configured to be active in the physical standby role at the primary database North_Sales and at the physical standby database South_Sales:

```
srvctl add service -d North_Sales -s sales -l PHYSICAL_STANDBY -q TRUE -e SELECT
-m BASIC -w 10 -z 150

srvctl add service -d South_Sales -s sales -l PHYSICAL_STANDBY -q TRUE -e SELECT
-m BASIC -w 10 -z 150
```

A service that is to be active in the physical standby role must be manually started and stopped one time at the primary database, using the SRVCTL utility, before the service can become active at a physical standby database. For example:

```
srvctl start service -d North_Sales -s sales -l PHYSICAL_STANDBY

srvctl stop service -d North_Sales -s sales -l PHYSICAL_STANDBY
```

See Also:

- For single-instance databases managed by Oracle Restart, see *Oracle Database Administrator's Guide* for more information about configuring database services with the SRVCTL utility
- For Oracle RAC databases, see *Oracle Real Application Clusters Administration and Deployment Guide* for more information about configuring database services with the SRVCTL utility

5.6.1.3 ONS Configuration Requirements

If a client-side ONS configuration is used, the client-side ONS configuration file must specify the hostname and port of the ONS daemon(s) of the primary database and each standby database.

If the client uses remote ONS subscription, the client must specify the hostname and port of the ONS daemon(s) of the primary database and each standby database.

6

Scenarios Using the DGMGRL Command-Line Interface

This chapter describes the prerequisites for getting started using the Data Guard command-line interface (DGMGRL). It also describes scenarios that demonstrate how to use DGMGRL to create, manage, and monitor a broker configuration.

This chapter contains the following sections:

- Prerequisites for Getting Started
- Scenario 1: Creating a Configuration
- Scenario 2: Setting Database Properties
- Scenario 3: Enabling the Configuration and Databases
- Scenario 4: Setting the Configuration Protection Mode
- Scenario 5: Enabling Fast-Start Failover and Starting the Observer
- Scenario 6: Performing Routine Management Tasks
- Scenario 7: Performing a Switchover Operation
- Scenario 8: Performing a Manual Failover Operation
- Scenario 9: Reinstating a Failed Primary Database
- Scenario 10: Converting a Physical Standby to a Snapshot Standby
- Scenario 11: Monitoring a Data Guard Configuration

6.1 Prerequisites for Getting Started

One of the prerequisites for using DGMGRL is that a primary database and any standby databases must already exist. The `DG_BROKER_START` initialization parameter must be set to `TRUE` for all databases in the configuration. You must use a server parameter file with the broker (see Section 2.1 and Section 7.1.3).

Convert the initialization parameter files (PFILE) on both primary and standby databases into server parameter files (SPFILE), if necessary. Use the following SQL*Plus command:

```
CREATE SPFILE FROM PFILE='pfilename';
```

If an instance was not started with a server parameter file, then you must shut down the instance and restart it using the server parameter file.

After starting the Oracle instance, set the `DG_BROKER_START=TRUE` initialization parameter using the SQL `ALTER SYSTEM` statement. The parameter value will be

saved in the server parameter file. The next time you start the Oracle instance, the broker is started automatically, and you do not need to issue the SQL `ALTER SYSTEM` statement again.

> **See Also:** *Oracle Database Administrator's Guide* for detailed information about creating server parameter files

The following assumptions are made for the scenarios in this chapter:

- TCP/IP is used to connect to primary and standby databases.
- The standby database has been created from backups of the primary database control files and datafiles as described in the *Oracle Data Guard Concepts and Administration*.
- The scenarios in this chapter assume the following broker configuration:
  - The configuration name is `DRSolution`.
  - The database unique name (`DB_UNIQUE_NAME`) of the primary database is `North_Sales`.
  - The database unique name (`DB_UNIQUE_NAME`) of the remote standby database is `South_Sales`.
  - The protection mode is maximum performance mode.
  - There are standby redo log files configured for both the primary and standby database. The transport mode for both databases is `ASYNC`.
  - The standby database is a physical standby database.

6.2 Scenario 1: Creating a Configuration

This section provides examples that create a broker configuration named `DRSolution` that includes a primary and standby database named `North_Sales` and `South_Sales`.

The following steps show how to create a configuration and add one physical standby database.

Step 1 Invoke DGMGRL.

To start DGMGRL, enter `dgmgrl` at the command-line prompt on a system where Oracle Data Guard is installed:

```
$ dgmgrl
```

The DGMGRL prompt is displayed:

```
DGMGRL>
```

Step 2 Connect to the primary database.

Before you specify any command (other than the `HELP`, `EXIT`, or `QUIT`), you must first connect to the primary database using the DGMGRL `CONNECT` command.

The account from which you connect to the database (`SYS` in this example) must have `SYSDBA` privileges on the primary and standby databases.

> **Note:** You do not have to include `AS SYSDBA` on the `CONNECT` command because `SYSDBA` is the default setting for this command.

The following examples show two variations of the CONNECT command. Example 6–1 shows how to connect to the default database on the local system, and Example 6–2 includes the Oracle Net Services connect identifier (North_Sales.example.com) to make a connection to a database located on a remote system. In both examples, you are prompted for a password.

Example 6–1 Connecting to the Primary Database on the Local System

```
DGMGRL> CONNECT sys;
Password: password
Connected.
```

Example 6–2 Connecting to the Primary Database on a Remote System

```
DGMGRL> CONNECT sys@North_Sales.example.com;
Password: password
Connected.
```

Step 3 Create the broker configuration.

To create the broker configuration, you first define the configuration including a profile for the primary database, which in this case is called North_Sales. In a later command, you will add a profile for the standby database, South_Sales.

> **Note:** The names for the primary and standby databases must match their database unique names. Fetch these from their DB_UNIQUE_NAME initialization parameter as follows:
>
> ```
> SQL> SHOW PARAMETER DB_UNIQUE_NAME;
> ```

Use the CREATE CONFIGURATION command to create the DRSolution configuration and define the primary database, North_Sales:

```
DGMGRL> CREATE CONFIGURATION 'DRSolution' AS
>  PRIMARY DATABASE IS 'North_Sales'
>  CONNECT IDENTIFIER IS North_Sales.example.com;
```

DGMGRL returns the following information:

```
Configuration "DRSolution" created with primary database "North_Sales"
```

The name North_Sales is the value of this database's DB_UNIQUE_NAME initialization parameter.

Step 4 Show the configuration information.

Use the SHOW CONFIGURATION command to display a brief summary of the configuration:

```
DGMGRL> SHOW CONFIGURATION;
```

DGMGRL returns the following information:

```
Configuration - DRSolution

  Protection Mode: MaxPerformance
  Databases:
    North_Sales - Primary database

Fast-Start Failover: DISABLED
```

```
Configuration Status:
DISABLED
```

Step 5 Add a standby database to the configuration.

To add a standby database to the `DRSolution` configuration, use the `ADD DATABASE` command to create a broker configuration profile for the standby database.

The following command defines `South_Sales` as a standby database, which is the standby database associated with the primary database called `North_Sales`:

```
DGMGRL> ADD DATABASE 'South_Sales' AS
>  CONNECT IDENTIFIER IS South_Sales.example.com;
```

DGMGRL returns the following information:

```
Database "South_Sales" added
```

The name `South_Sales` is the value of the database's `DB_UNIQUE_NAME` initialization parameter.

Use the `SHOW CONFIGURATION` command to verify that the `South_Sales` database was added to the `DRSolution` configuration:

```
DGMGRL> SHOW CONFIGURATION;
```

DGMGRL returns the following information:

```
Configuration - DRSolution

  Protection Mode: MaxPerformance
  Databases:
    North_Sales  - Primary database
    South_Sales  - Physical standby database

Fast-Start Failover: DISABLED

Configuration Status:
DISABLED

DGMGRL>
```

6.3 Scenario 2: Setting Database Properties

After you create the configuration with DGMGRL, you can set database properties at any time. For example, the following statements set the `LogArchiveFormat` and `StandbyArchiveLocation` database properties for the `South_Sales` standby database:

```
DGMGRL> EDIT DATABASE 'South_Sales' SET PROPERTY 'LogArchiveFormat'='log_%t_%s_%r_%d.arc';
Property "LogArchiveFormat" updated.

DGMGRL> EDIT DATABASE 'South_Sales' SET PROPERTY 'StandbyArchiveLocation'='/archfs/arch/';
Property "StandbyArchiveLocation" updated.
```

Use the `SHOW DATABASE VERBOSE` command to view all properties and their values for a database. The following example shows the properties for the `South_Sales` database.

```
DGMGRL> SHOW DATABASE VERBOSE 'South_Sales';

Database - South_Sales
```

```
  Role:            PHYSICAL STANDBY
  Intended State:  OFFLINE
  Transport Lag:   (unknown)
  Apply Lag:       (unknown)
  Real Time Query: OFF
  Instance(s):
    south_sales1

  Properties:
    DGConnectIdentifier             = 'South_Sales.example.com'
    ObserverConnectIdentifier       = ''
    LogXptMode                      = 'ASYNC'
    DelayMins                       = '0'
    Binding                         = 'optional'
    MaxFailure                      = '0'
    MaxConnections                  = '1'
    ReopenSecs                      = '300'
    NetTimeout                      = '30'
    RedoCompression                 = 'DISABLE'
    LogShipping                     = 'ON'
    PreferredApplyInstance          = ''
    ApplyInstanceTimeout            = '0'
    ApplyParallel                   = 'AUTO'
    StandbyFileManagement           = 'AUTO'
    ArchiveLagTarget                = '0'
    LogArchiveMaxProcesses          = '5'
    LogArchiveMinSucceedDest        = '1'
    DbFileNameConvert               = 'dbs/t, dbs/bt'
    LogFileNameConvert              = 'dbs/t, dbs/bt'
    FastStartFailoverTarget         = ''
    InconsistentProperties          = '(monitor)'
    InconsistentLogXptProps         = '(monitor)'
    SendQEntries                    = '(monitor)'
    LogXptStatus                    = '(monitor)'
    RecvQEntries                    = '(monitor)'
    SidName                         = 'south_sales1'
    StaticConnectIdentifier         = '(DESCRIPTION=(ADDRESS=(PROTOCOL=tcp)
(HOST=south_sales1.example.com)(PORT=2840))
(CONNECT_DATA=(SERVICE_NAME=South_Sales_DGMGRL.example.com)
(INSTANCE_NAME=south_sales1)(SERVER=DEDICATED)))'
    StandbyArchiveLocation          = 'USE_DB_RECOVERY_FILE_DEST'
    AlternateLocation               = ''
    LogArchiveTrace                 = '255'
    LogArchiveFormat                = 'db2r_%d_%t_%s_%R.arc'
    LatestLog                       = '(monitor)'
    TopWaitEvents                   = '(monitor)'

Database Status:
DISABLED
```

If broker management of the database is enabled, setting a database property value causes the underlying parameter value to be changed in the corresponding database, and the value for the changed parameter is reflected in the server parameter file. Thus, if the database is shut down and restarted outside of Oracle Enterprise Manager and DGMGRL (such as from the SQL*Plus interface), the database uses the new parameter values from the updated server parameter file when it starts. However, you should not make changes to the redo transport services initialization parameters through SQL statements. Doing so will cause an inconsistency between the database and the broker.

> **Note:** The database properties are typically displayed in mixed-case (for example, `LogArchiveFormat`) typeface to help you visually differentiate database properties (from the corresponding initialization parameter, SQL statement, or PL/SQL procedure), which are typically documented in `UPPERCASE` typeface. However, the commands to manage properties are not case sensitive; you can issue commands in uppercase, lowercase, or mixed-case.

You can change a property if the database is enabled or disabled. However, if the database is disabled when you change a property, the change does not take effect until the database is enabled.

6.4 Scenario 3: Enabling the Configuration and Databases

So far, the `DRSolution` configuration is disabled, which means it is not under the control of the Data Guard broker. When you finish configuring the databases into a broker configuration and setting any necessary database properties, you must enable the configuration to allow the Data Guard broker to manage it.

You can enable:

- The entire configuration, including all of its databases
- A standby database

Enable the entire configuration.

You can enable the entire configuration, including all of the databases, with the following command:

```
DGMGRL> ENABLE CONFIGURATION;
Enabled.
```

Show the configuration.

Use the `SHOW` command to verify that the configuration and its databases were successfully enabled:

```
DGMGRL> SHOW CONFIGURATION;
```

DGMGRL returns the following information:

```
Configuration - DRSolution

  Protection Mode: MaxPerformance
  Databases:
    North_Sales  - Primary database
    South_Sales  - Physical standby database

Fast-Start Failover: DISABLED

Configuration Status:
SUCCESS
```

Enable the database.

This step is unnecessary except if the standby database was previously disabled with the `DISABLE DATABASE` command. Normally, enabling the configuration also enables the standby database.

```
DGMGRL> ENABLE DATABASE 'South_Sales';
Enabled.
```

Show the database.

```
DGMGRL> SHOW DATABASE 'South_Sales';

Database - South_Sales

  Role:            PHYSICAL STANDBY
  Intended State:  APPLY-ON
  Transport Lag:   0 seconds
  Apply Lag:       0 seconds
  Real Time Query: OFF
  Instance(s):
    south_sales1

Database Status:
SUCCESS
```

6.5 Scenario 4: Setting the Configuration Protection Mode

You can change the protection mode of the configuration at any time. However, it is best if you do this when there is no activity occurring in the configuration if you are moving to the maximum protection or maximum availability modes.

> **Note:** If you change the protection mode from maximum performance mode to maximum protection mode, the broker automatically restarts the primary database. If you wish to avoid restarting the database, first change the protection mode to maximum availability mode and then change the protection mode to maximum protection mode.
>
> A restart of the primary database is not required when changing the protection mode from:
>
> - maximum performance to maximum availability
> - maximum availability to maximum protection

This scenario sets the protection mode of the configuration to the `MAXAVAILABILITY` mode. Note that this protection mode requires that there be at least one standby database configured to use standby redo log files, with its `LogXptMode` database property set to `SYNC`.

Step 1 Configure standby redo log files, if necessary.

Because you will be setting the protection mode to the `MAXAVAILABILITY` mode, it is important to ensure that sufficient standby redo log files are configured on the standby database.

Step 2 Set the LogXptMode database property appropriately.

Use the `EDIT DATABASE (property)` command on the standby database to set the redo transport service that corresponds to the protection mode you plan to set. If the protection mode to be set is `MAXAVAILABILITY`, it is required that the redo transport service of at least one standby database is set to `SYNC`. For example:

```
DGMGRL> EDIT DATABASE 'South_Sales' SET PROPERTY 'LogXptMode'='SYNC';
Property "LogXptMode" updated
```

The broker will not allow this command to succeed unless the standby database is configured with standby redo log files in the configuration.

Step 3 Change the overall protection mode for the configuration.

Use the `EDIT CONFIGURATION` command to upgrade the broker configuration to the `MAXAVAILABILITY` protection mode:

```
DGMGRL> EDIT CONFIGURATION SET PROTECTION MODE AS MAXAVAILABILITY;
Succeeded.
```

If the configuration is disabled when you enter this command, the actual protection mode change is not applied until you enable the configuration with the `ENABLE CONFIGURATION` command. The broker will not allow you to enable the configuration if it does not find a standby database in the configuration that can support the requirements of the protection mode.

Step 4 Verify the protection mode has changed.

Use the `SHOW CONFIGURATION` command to display the current protection mode for the configuration:

```
DGMGRL> SHOW CONFIGURATION;

Configuration - DRSolution

  Protection Mode: MaxAvailability
  Databases:
    North_Sales  - Primary database
    South_Sales  - Physical standby database

Fast-Start Failover: DISABLED

Configuration Status:
SUCCESS
```

See Also: Section 4.6, "Managing Data Protection Modes" on page 4-16

6.6 Scenario 5: Enabling Fast-Start Failover and Starting the Observer

You can enable fast-start failover from any site, including the observer site, while connected to any database in the broker configuration. Enabling fast-start failover does not trigger a failover. Instead, it allows the observer that is monitoring the configuration to initiate a fast-start failover if conditions warrant a failover.

Fast-start failover can be enabled in configurations operating in either maximum performance or maximum availability protection mode. This section describes the steps to enable fast-start failover and start the observer where the configuration protection mode is set to maximum availability mode.

Step 1 Ensure standby redo logs are configured on the primary and target standby databases.

Standby redo logs must be configured on the primary and standby databases. You must stop log apply services prior to configuring standby redo logs.

> **See Also:** *Oracle Data Guard Concepts and Administration* for instructions on configuring standby redo log files

Step 2 Ensure the LogXptMode Property is set to SYNC.

The `LogXptMode` database property must be set to `SYNC` on the primary and target standby databases.

To set the redo transport service that corresponds to the protection mode you plan to set, use the `EDIT DATABASE` (property) command on the primary and target standby databases. For example, if the protection mode to be set is `MAXAVAILABILITY`, you must set the `LogXptMode` property to `SYNC` on the primary database and on the target standby database, as shown in the following examples:

```
DGMGRL> EDIT DATABASE 'North_Sales' SET PROPERTY 'LogXptMode'='SYNC';
Property "LogXptMode" updated

DGMGRL> EDIT DATABASE 'South_Sales' SET PROPERTY 'LogXptMode'='SYNC';
Property "LogXptMode" updated
```

The broker does not allow these commands to succeed unless the databases are configured with standby redo log files.

Step 3 Set the FastStartFailoverTarget configuration property.

If you have two or more standby databases, set up the `FastStartFailoverTarget` configuration property on the primary database to indicate the desired target standby database. The broker reciprocally sets this property for the target standby database to indicate the primary database as its future target standby database when fast-start failover is actually enabled. There is no need for you set this property on the target standby as this is done for you automatically.

For example:

```
DGMGRL> EDIT DATABASE 'North_Sales' SET PROPERTY FastStartFailoverTarget='South_
Sales';
Property "FastStartFailoverTarget" updated
```

Step 4 Upgrade the protection mode to `MAXAVAILABILITY`, if necessary.

If it is necessary to upgrade the protection mode, use the following DGMGRL `EDIT CONFIGURATION` command. For example:

```
DGMGRL> EDIT CONFIGURATION SET PROTECTION MODE AS MAXAVAILABILITY;
```

Step 5 Enable Flashback Database on the primary and target standby databases, if necessary.

If it is not already enabled on the primary and standby databases, enable Flashback Database by issuing the following statements on each database:

```
ALTER SYSTEM SET UNDO_RETENTION=3600 SCOPE=SPFILE;
ALTER SYSTEM SET UNDO_MANAGEMENT='AUTO' SCOPE=SPFILE;
SHUTDOWN IMMEDIATE;
STARTUP MOUNT;
SHOW PARAMETER UNDO;
ALTER SYSTEM SET DB_FLASHBACK_RETENTION_TARGET=4320 SCOPE=BOTH;
```

```
ALTER DATABASE ARCHIVELOG;
ALTER SYSTEM SET db_recovery_file_dest_size=<size>;
ALTER SYSTEM SET db_recovery_file_dest=<directory-specification>;
ALTER DATABASE FLASHBACK ON;
ALTER DATABASE OPEN;
```

Ensure the `UNDO_RETENTION` and `DB_FLASHBACK_RETENTION_TARGET` initialization parameters are set to sufficiently large values so that reinstatement is still possible after a prolonged outage.

Step 6 Start the observer.

Start the observer by logging into the observer computer and running DGMGRL. Connect to the configuration as a user who has the `SYSDBA` privilege and then issue the `START OBSERVER` command. Note that the command does not return; that is you will not get the DGMGRL prompt after issuing the command.

```
DGMGRL> CONNECT sys@North_Sales.example.com;
Password: password
Connected.
DGMGRL> START OBSERVER;
Observer started
```

When starting the observer interactively, Oracle recommends that connection credentials not be supplied as command line parameters to the DGMGRL connect command. This practice prevents other users on the system from using a utility (for example, the UNIX ps utility) to display connection credentials. It also prevents clear-text passwords from being visible on the user's terminal.

When starting the observer from a script, Oracle recommends that you use a method that supports 'connect /', so that database connection credentials do not have to be embedded within the script. If you choose to use a client-side Oracle Wallet as a secure external password store (see *Oracle Database Advanced Security Administrator's Guide*), be sure to add credentials for both the primary and fast-start failover target standby databases. The database connect string that you specify when adding the credentials for each database must match the `ObserverConnectIdentifer` or `DGConnectIdentifier` database property.

Step 7 Enable fast-start failover.

You can enable fast-start failover while connected to any database system in the broker configuration. For example:

```
DGMGRL> ENABLE FAST_START FAILOVER;
Enabled.
```

Step 8 Verify the fast-start failover configuration.

Use the `SHOW FAST_START FAILOVER` command to display the fast-start failover settings:

```
DGMGRL> SHOW FAST_START FAILOVER;

Fast-Start Failover: ENABLED
 Threshold:           30 seconds
 Target:              South_Sales
 Observer:            observer.example.com
 Lag Limit:           30 seconds (not in use)
 Shutdown Primary:    TRUE
 Auto-reinstate:      TRUE
```

```
Configurable Failover Conditions
 Health Conditions:
   Corrupted Controlfile          YES
   Corrupted Dictionary           YES
   Inaccessible Logfile            NO
   Stuck Archiver                  NO
   Datafile Offline               YES

 Oracle Error Conditions:
   (none)
```

The following commands show that the `FastStartFailoverTarget` property is set up reciprocally once fast-start failover is enabled. The first command, issued for the current primary database `North_Sales`, shows the value of the `FastStartFailoverTarget` property to be the current target standby, `South_Sales`. The second command, issued for the target standby `South_Sales`, shows the current primary, `North_Sales`, as the target standby's future target standby should it ever take over as a primary.

```
DGMGRL> SHOW DATABASE 'North_Sales' FastStartFailoverTarget;
 FastStartFailoverTarget='South_Sales';

DGMGRL> SHOW DATABASE 'South_Sales' FastStartFailoverTarget;
 FastStartFailoverTarget='North_Sales';
```

6.7 Scenario 6: Performing Routine Management Tasks

There may be situations in which you want to change the state or properties of the databases in a broker configuration to perform routine maintenance on one or more databases. You might also need to temporarily disable broker management of databases in a configuration.

6.7.1 Changing Properties and States

As you monitor the configuration, you might need to dynamically modify the states of the databases or their properties. The following sections show how to change the state or properties of the databases in the configuration.

6.7.1.1 Alter a Database Property

You can modify the values of database properties at any time—if the database is enabled or disabled.

Example 6–3 shows how to use the `EDIT DATABASE` command to change the `LogXptMode` database property to the value ASYNC for the `North_Sales` database.

Example 6–3 Altering a Database Property

```
DGMGRL> EDIT DATABASE 'North_Sales' SET PROPERTY 'LogXptMode'=ASYNC;
```

DGMGRL returns the following message to indicate that the `LogXptMode` property was updated successfully in the Data Guard configuration file:

```
Property "LogXptMode" updated
```

If the configuration is currently disabled, the database does not use the new property value until you enable the broker configuration with the `ENABLE CONFIGURATION` command.

6.7.1.2 Alter the State of a Standby Database

You might want to temporarily stop Redo Apply on a physical standby. To change the state of the standby database to `APPLY-OFF`, enter the `EDIT DATABASE` command as shown in Example 6–4.

Example 6–4 Altering a Standby Database State

```
DGMGRL> EDIT DATABASE 'South_Sales' SET STATE='APPLY-OFF';
Succeeded.
```

Redo data is still being received when you put the physical standby database in the `APPLY-OFF` state.

6.7.1.3 Alter the State of a Primary Database

You might want to stop the transmittal of redo data to the standby database. To change the state of the primary database to accommodate this, use the following command:

```
DGMGRL> EDIT DATABASE North_Sales SET STATE=TRANSPORT-OFF;

Succeeded.
```

To change the state of the primary database back to TRANSPORT-ON, do the following:

```
DGMGRL> EDIT DATABASE North_Sales SET STATE=TRANSPORT-ON;

Succeeded.
```

6.7.2 Disabling the Configuration and Databases

When you disable the broker configuration or any of its databases, you are disabling the broker's management of those objects and are effectively removing your ability to use DGMGRL to manage and monitor the disabled object. However, disabling the broker's management of a broker configuration does not affect the actual operation of the underlying Data Guard configuration or the databases. For example, the redo transport services and log apply services in the Data Guard configuration continue to function unchanged, but you can no longer manage them.

6.7.2.1 Disable a Configuration

You must use the `DISABLE CONFIGURATION` command to disable management of the entire broker configuration including the primary database as shown in Example 6–5.

Example 6–5 Disabling the Configuration and Primary Database

```
DGMGRL> DISABLE CONFIGURATION;
```

The only way to disable broker management of the primary database is to use the `DISABLE CONFIGURATION` command; the `DISABLE DATABASE` command only disables management of a standby database.

Note: If you disable management of a configuration while connected to the standby database, you must connect to the primary database to reenable the configuration.

Disabling the broker's management of an object *does not* remove its profile from the broker configuration file. You can reenable your ability to use DGMGRL (or Enterprise Manager) to manage the object by entering the appropriate `ENABLE CONFIGURATION` or `ENABLE DATABASE` command.

6.7.2.2 Disable a Standby Database

You use the `DISABLE DATABASE` command when you temporarily do not want the broker to manage and monitor a standby database.

You can explicitly disable broker management of a standby database to prevent it from being enabled when the rest of the configuration is enabled. Example 6–6 shows how to disable the `South_Sales` standby database.

Example 6–6 Disabling a Standby Database

```
DGMGRL> DISABLE DATABASE 'South_Sales';
Disabled.
```

Note: You cannot disable a standby database from the configuration if fast-start failover is enabled and the database to be disabled is the target standby database.

Note: If you disable management of a standby database while connected to that standby database, you must connect to the primary database or another enabled standby database to reenable broker-management of the standby database.

Caution: If you disable broker management of a standby database in the broker configuration, that standby database cannot be used by the broker as a failover target in the event of loss of the primary database.

When operating under either maximum protection mode or maximum availability mode, the broker prevents you from disabling the last standby database that supports the protection mode.

6.7.3 Removing the Configuration or a Standby Database

When you use either the `REMOVE CONFIGURATION` or `REMOVE DATABASE` command, you effectively delete the configuration or standby database profile from the broker configuration file, removing the ability of the Data Guard broker to manage the configuration or the standby database, respectively.

A remove operation with the `PRESERVE DESTINATIONS` clause *does not* remove or delete the actual Data Guard configuration underneath, nor does it affect the operation of the actual Data Guard configuration and its databases.

Caution: After you use the `REMOVE CONFIGURATION` or `REMOVE DATABASE` command, you cannot recover the configuration or database profile that was deleted from the broker configuration file. You must go through the steps in Section 6.2 as necessary, to create a broker configuration that can be managed with DGMGRL (or the Enterprise Manager).

Note: You cannot remove a standby database from the configuration if fast-start failover is enabled and the database to be removed is the target standby database.

Step 1 Remove a standby database from the configuration.

When you use the `REMOVE DATABASE` command, broker management and monitoring of the database ceases and the database's profile is deleted from the broker configuration file.

Show the configuration before deletion of the `South_Sales` standby database:

```
DGMGRL> SHOW CONFIGURATION;

Configuration - DRSolution

  Protection Mode: MaxPerformance
  Databases:
    North_Sales  - Primary database
    South_Sales  - Physical standby database

Fast-Start Failover: DISABLED

Configuration Status:
SUCCESS
```

Issue the DGMGRL `REMOVE DATABASE` command to remove the `South_Sales` database information from the Data Guard configuration file:

```
DGMGRL> REMOVE DATABASE 'South_Sales';
Removed database "South_Sales" from the configuration
```

Show the configuration after deletion of the `South_Sales` standby database:

```
DGMGRL> SHOW CONFIGURATION;

Configuration - DRSolution

  Protection Mode: MaxPerformance
  Databases:
    North_Sales  - Primary database

Fast-Start Failover: DISABLED

Configuration Status:
SUCCESS
```

When operating under either maximum protection mode or maximum availability mode, the broker prevents you from deleting the last standby database that supports the protection mode.

Step 2 Remove the broker configuration.

Use the following command to remove the entire configuration from management and monitoring by the broker:

```
DGMGRL> REMOVE CONFIGURATION;
```

> **Note:** You cannot remove the configuration if fast-start failover is enabled.

DGMGRL returns the following message to indicate the command successfully removed all of the configuration information from the Data Guard configuration file:

```
Removed configuration

DGMGRL> SHOW CONFIGURATION;
Error: ORA-16532: Data Guard broker configuration does not exist

Configuration details cannot be determined by DGMGRL
```

6.8 Scenario 7: Performing a Switchover Operation

You can switch the role of the primary database and a standby database using the `SWITCHOVER` command. Before you issue the `SWITCHOVER` command, you must ensure:

- The state of the primary and standby databases are `TRANSPORT-ON` and `APPLY-ON`, respectively.
- All participating databases are in good health, without any errors or warnings present.
- The standby database properties were set on the primary database, so that the primary database can function correctly when transitioning to a standby database (shown in the following examples in boldface type).
- Standby redo log files on the primary database are set up, and the `LogXptMode` database property is set to `SYNC` if the configuration is operating in either maximum availability mode or maximum protection mode.
- If fast-start failover is enabled, you can perform a switchover only to the standby database that was specified as the target standby database.

Step 1 Check the primary database.

Use the `SHOW DATABASE VERBOSE` command to check the state, health, and properties of the primary database, as follows:

```
DGMGRL> SHOW DATABASE VERBOSE 'North_Sales';

Database - North_Sales

  Role:            PRIMARY
  Intended State:  TRANSPORT-ON
  Instance(s):
    north_sales1

  Properties:
    DGConnectIdentifier             = 'North_Sales.example.com'
    ObserverConnectIdentifier       = ''
    LogXptMode                      = 'sync'
```

```
    DelayMins                       = '0'
    Binding                         = 'optional'
    MaxFailure                      = '0'
    MaxConnections                  = '1'
    ReopenSecs                      = '300'
    NetTimeout                      = '30'
    RedoCompression                 = 'DISABLE'
    LogShipping                     = 'ON'
PreferredApplyInstance          = ''
    ApplyInstanceTimeout            = '0'
    ApplyParallel                   = 'AUTO'
    StandbyFileManagement           = 'AUTO'
    ArchiveLagTarget                = '0'
    LogArchiveMaxProcesses          = '5'
    LogArchiveMinSucceedDest        = '1'
    DbFileNameConvert               = 'dbs/bt, dbs/t'
    LogFileNameConvert              = 'dbs/bt, dbs/t'
    FastStartFailoverTarget         = 'South_Sales'
    InconsistentProperties          = '(monitor)'
    InconsistentLogXptProps         = '(monitor)'
    SendQEntries                    = '(monitor)'
    LogXptStatus                    = '(monitor)'
    RecvQEntries                    = '(monitor)'
    SidName                         = 'north_sales1'
    StaticConnectIdentifier         = '(DESCRIPTION=(ADDRESS=(PROTOCOL=tcp)
(HOST=North_Sales.example.com)(PORT=2840))
(CONNECT_DATA=(SERVICE_NAME=North_Sales_DGMGRL.example.com)
(INSTANCE_NAME=north_sales1)(SERVER=DEDICATED)))'
    StandbyArchiveLocation          = 'USE_DB_RECOVERY_FILE_DEST'
    AlternateLocation               = ''
    LogArchiveTrace                 = '255'
    LogArchiveFormat                = 'db1r_%d_%t_%s_%R.arc'
    LatestLog                       = '(monitor)'
    TopWaitEvents                   = '(monitor)'

Database Status:
SUCCESS

DGMGRL>
```

In particular, you should examine the boldface properties and the current status of the primary database. See Chapter 4 for information about managing databases.

Step 2 Check the standby database that is the target of the switchover.

Use the `SHOW DATABASE VERBOSE` command to check the state, health, and properties of the standby database that is the target of the switchover. For example:

```
DGMGRL> SHOW DATABASE VERBOSE 'South_Sales';

Database - South_Sales

  Role:            PHYSICAL STANDBY
  Intended State:  ONLINE
  Transport Lag:   0
  Apply Lag:       0
  Real Time Query: OFF
  Instance(s):
    south_sales1
Properties:
    DGConnectIdentifier             = 'South_Sales.example.com'
```

```
    ObserverConnectIdentifier       = ''
    LogXptMode                      = 'ASYNC'
    DelayMins                       = '0'
    Binding                         = 'optional'
    MaxFailure                      = '0'
    MaxConnections                  = '1'
    ReopenSecs                      = '300'
    NetTimeout                      = '30'
    RedoCompression                 = 'DISABLE'
    LogShipping                     = 'ON'
    PreferredApplyInstance          = ''
    ApplyInstanceTimeout            = '0'
    ApplyParallel                   = 'AUTO'
    StandbyFileManagement           = 'AUTO'
    ArchiveLagTarget                = '0'
    LogArchiveMaxProcesses          = '5'
    LogArchiveMinSucceedDest        = '1'
    DbFileNameConvert               = 'dbs/t, dbs/bt'
    LogFileNameConvert              = 'dbs/t, dbs/bt'
    FastStartFailoverTarget         = 'North_Sales'
    InconsistentProperties          = '(monitor)'
    InconsistentLogXptProps         = '(monitor)'
    SendQEntries                    = '(monitor)'
    LogXptStatus                    = '(monitor)'
    RecvQEntries                    = '(monitor)'
    SidName                         = 'south_sales1'
    StaticConnectIdentifier         = '(DESCRIPTION=(ADDRESS=(PROTOCOL=tcp)
(HOST=south_sales1.example.com)(PORT=2840))
(CONNECT_DATA=(SERVICE_NAME=South_Sales_DGMGRL.example.com)
(INSTANCE_NAME=south_sales1)(SERVER=DEDICATED)))'
    StandbyArchiveLocation          = 'USE_DB_RECOVERY_FILE_DEST'
    AlternateLocation               = ''
    LogArchiveTrace                 = '255'
    LogArchiveFormat                = 'db2r_%d_%t_%s_%R.arc'
    LatestLog                       = '(monitor)'
    TopWaitEvents                   = '(monitor)'

Database Status:
SUCCESS
```

In particular, you should examine the current status of the database.

Step 3 Issue the switchover command.

Issue the `SWITCHOVER` command to swap the roles of the primary and standby databases. The following example shows how the broker automatically shuts down and restarts the old primary database as a part of the switchover. (See the usage notes in Section 7.1.3 for information about how to set up the broker environment so that DGMGRL can automatically restart the primary and standby databases for you.)

```
DGMGRL> switchover to 'South_Sales';
Performing switchover NOW, please wait...
New primary database "South_Sales" is opening...
Operation requires shutdown of instance "north_sales1" on database "North_Sales"
Shutting down instance "north_sales1"...
ORA-01109: database not open

Database dismounted.
ORACLE instance shut down.
Operation requires startup of instance "north_sales1" on database "North_Sales"
Starting instance "north_sales1"...
```

```
ORACLE instance started.
Database mounted.
Switchover succeeded, new primary is "South_Sales"
```

After the switchover completes, use the `SHOW CONFIGURATION` and `SHOW DATABASE` commands to verify that the switchover operation was successful.

Step 4 Show the configuration.

Issue the `SHOW CONFIGURATION` command to verify that the switchover was successful.

```
DGMGRL> SHOW CONFIGURATION;

Configuration - DRSolution

  Protection Mode: MaxAvailability
  Databases:
    South_Sales  - Primary database
    North_Sales  - Physical standby database

Fast-Start Failover: DISABLED

Configuration Status:
SUCCESS
```

6.9 Scenario 8: Performing a Manual Failover Operation

You invoke a failover operation in response to an emergency situation, usually when the primary database cannot be accessed or is unavailable. See Section 5.2 before you fail over to decide which standby database should be the target of the failover. The following scenario describes a failover to the remote database called `South_Sales`.

Note: If fast-start failover is enabled, you can perform a manual failover only to the standby database that was specified as the target of a fast-start failover and only when the observer is running and currently has connectivity with the standby database.

If you want to perform a manual failover to a standby database that is not the fast-start failover target standby database, you must first disable fast-start failover using the `FORCE` option on the standby database you want to fail over. See Section 5.5.5, "Disabling Fast-Start Failover" for more information about the `FORCE` option.

Step 1 Connect to the target standby database.

To perform the failover operation, you must connect to the standby database to which you want to fail over to as a user that has the `SYSDBA` privilege. For example:

```
DGMGRL> CONNECT sys@South_Sales.example.com;
Password: password
Connected.
```

Step 2 Issue the failover command.

Now you can issue the failover command to make the target standby database the new primary database for the configuration.

```
DGMGRL> FAILOVER TO 'South_Sales';
Performing failover NOW, please wait...
```

```
Failover succeeded, new primary is "South_Sales"
```

Note that after the failover completes, the original primary database cannot be used as a standby database of the new primary database unless it is reinstated or re-created (as described in Section 5.4.3).

Step 3 Show the configuration.

Issue the `SHOW CONFIGURATION` command to verify the failover.

```
DGMGRL> SHOW CONFIGURATION;

Configuration - DRSolution

  Protection Mode: MaxAvailability
  Databases:
    South_Sales  - Primary database
      Warning: ORA-16629: database reports a different protection level from the
protection mode

    North_Sales - Physical standby database (disabled)
      ORA-16661: the standby database needs to be reinstated

Fast-Start Failover: DISABLED

Configuration Status:
WARNING
```

Note that in this example, the configuration was operating in maximum availability mode. The protection mode was preserved after the failover. The configuration also has a warning status. The `SHOW DATABASE` command for the new primary shows that the warning is the result of not having an enabled physical standby database. As a result, the warning status indicates that the protection level of the configuration is not the same as the configured mode.

Step 4 Show the new primary database.

```
DGMGRL> SHOW DATABASE South_Sales;
Database - South_Sales

  Role:            PRIMARY
  Intended State:  TRANSPORT-ON
  Instance(s):
    south_sales1

  Database Warning(s):
    ORA-16629: database reports a different protection level from the protection
mode

Database Status:
WARNING
```

Step 5 Show the old primary database.

Issue the `SHOW DATABASE` command to see that the former (failed) primary database was disabled by the broker as a consequence of the failover. It must be reinstated (as described in Section 5.4.3).

```
DGMGRL> SHOW DATABASE 'North_Sales';
Database - North_Sales
```

```
  Role:            PHYSICAL STANDBY
  Intended State:  APPLY-ON
  Transport Lag:   (unknown)
  Apply Lag:       (unknown)
  Real Time Query: OFF
  Instance(s):
    north_sales1

Database Status:
ORA-16661: the standby database needs to be reinstated
```

6.10 Scenario 9: Reinstating a Failed Primary Database

If your primary database had been configured with Flashback Database, you can easily reinstate the failed primary database as a standby database of the new primary database. The failed primary database will be reinstated as a standby type that matches the old standby database. For example, if you failed over to a physical standby database, the old primary will be reinstated as a physical standby database.

To reinstate the failed primary database, start it to the mounted state. Then run DGMGRL, connect to the new primary database and reinstate the old primary database.

Step 1 Restart the Old Primary Database.

```
% sqlplus sys as sysdba
Enter password: password

SQL> STARTUP MOUNT;
ORACLE instance started.

Total System Global Area  234364928 bytes
Fixed Size                  1296352 bytes
Variable Size             209717280 bytes
Database Buffers           16777216 bytes
Redo Buffers                6574080 bytes
Database mounted.
```

Step 2 Reinstate the old primary database.

```
% dgmgrl connect sys
Password: password
Connected.
DGMGRL> REINSTATE DATABASE 'North_Sales';
Reinstating database "North_Sales", please wait...
Operation requires shutdown of instance "north_sales1" on database "North_Sales"
Shutting down instance "north_sales1"...
ORA-01109: database not open

Database dismounted.
ORACLE instance shut down.
Operation requires startup of instance "north_sales1" on database "North_Sales"
Starting instance "north_sales1"...
ORACLE instance started.
Database mounted.
Continuing to reinstate database "North_Sales" ...
Reinstatement of database "North_Sales" succeeded
```

After the primary has been reinstated, issue the `SHOW CONFIGURATION` and `SHOW DATABASE` commands to confirm that the old primary has been successfully reinstated.

Step 3 Show the Configuration and Databases.

```
DGMGRL> SHOW CONFIGURATION

Configuration - DRSolution

  Protection Mode: MaxAvailability
  Databases:
    South_Sales  - Primary database
    North_Sales  - Physical standby database

Fast-Start Failover: DISABLED

Configuration Status:
SUCCESS

DGMGRL> SHOW DATABASE 'South_Sales';

Database - South_Sales

  Role:            PRIMARY
  Intended State:  TRANSPORT-ON
  Instance(s):
    south_sales1

Database Status:
SUCCESS

DGMGRL> SHOW DATABASE 'North_Sales'

Database - North_Sales

  Role:            PHYSICAL STANDBY
  Intended State:  APPLY-ON
  Transport Lag:   0 seconds
  Apply Lag:       0 seconds
  Real Time Query: OFF
  Instance(s):
    north_sales1

Database Status:
SUCCESS
```

6.11 Scenario 10: Converting a Physical Standby to a Snapshot Standby

If you have a physical standby database that you would like to convert to a snapshot standby database, use the DGMGRL `CONVERT DATABASE` command. Redo data will continue to be received by the database while it is operating as a snapshot standby database, but it will not be applied until the snapshot standby is converted back into a physical standby database.

A physical standby database must be configured with a fast recovery area to convert it to a snapshot standby database. This is because a guaranteed restore point is created during the conversion process, and guaranteed restore points require a fast recovery area.

```
DGMGRL> convert database 'South_Sales' to snapshot standby;
Converting database "South_Sales" to a Snapshot Standby database, please wait...
Database "South_Sales" converted successfully

DGMGRL> SHOW CONFIGURATION;

Configuration - DRSolution

  Protection Mode: MaxPerformance
  Databases:
    North_Sales  - Primary database
    South_Sales  - Snapshot standby database

Fast-Start Failover: DISABLED

Configuration Status:
SUCCESS
```

When you are ready to revert the database back to a physical standby database, use the DGMGRL `CONVERT DATABASE` command again as follows. Any updates made to the database while it was operating as a snapshot standby database will be discarded. All accumulated redo data will be applied by Redo Apply services after the database is converted back to a physical standby database.

```
DGMGRL> CONVERT DATABASE 'South_Sales' to PHYSICAL STANDBY;
Converting database "South_Sales" to a Physical Standby database, please wait...
Operation requires shutdown of instance "south_sales1" on database "South_Sales"
Shutting down instance "south_sales1"...
Database closed.
Database dismounted.
ORACLE instance shut down.
Operation requires startup of instance "south_sales1" on database "South_Sales"
Starting instance "south_sales1"...
ORACLE instance started.
Database mounted.
Continuing to convert database "South_Sales" ...
Operation requires shutdown of instance "south_sales1" on database "South_Sales"
Shutting down instance "south_sales1"...
ORA-01109: database not open
Database dismounted.
ORACLE instance shut down.
Operation requires startup of instance "south_sales1" on database "South_Sales"
Starting instance "south_sales1"...
ORACLE instance started.
Database mounted.
Database "South_Sales" converted successfully
```

6.12 Scenario 11: Monitoring a Data Guard Configuration

The scenario in this section demonstrates how to use the `SHOW` command and monitorable database properties to identify and resolve a failure situation.

Step 1 Check the configuration status.

The status of the broker configuration is an aggregated status of all databases and instances in the broker configuration. You can check the configuration status first to determine whether or not any further action needs to be taken. If the configuration status is SUCCESS, everything in the broker configuration is working properly.

However, if you see a status of WARNING or ERROR, then something is wrong in the configuration.

For example, in the following display, you can see that the primary database has multiple warnings:

```
DGMGRL> SHOW CONFIGURATION;
Configuration - DRSolution

  Protection Mode: MaxPerformance
  Databases:
    North_Sales  - Primary database
      Warning: ORA-16809: multiple warnings detected for the database

    South_Sales  - Physical standby database

Fast-Start Failover: DISABLED

Configuration Status:
WARNING
```

Step 2 Check the database status.

To identify the warnings on the primary database, show its status using the `SHOW DATABASE` command:

```
DGMGRL> SHOW DATABASE 'North_Sales';
Database - North_Sales

  Role:            PRIMARY
  Intended State:  TRANSPORT-ON
  Instance(s):
    north_sales1
      Warning: ORA-16737: the redo transport service for standby "South_Sales" has
an error
      Warning: ORA-16714: the value of property LogArchiveTrace is inconsistent
with the database setting
      Warning: ORA-16715: redo transport-related property ReopenSecs of standby
 database "South_Sales" is inconsistent

Database Status:
WARNING
```

Step 3 Check the LogXptStatus monitorable database property.

The `SHOW DATABASE` output in step 2 shows a Warning for error ORA-16737. To identify the exact transport error, use the `LogXptStatus` monitorable database property:

```
DGMGRL> SHOW DATABASE 'North_Sales' 'LogXptStatus';
LOG TRANSPORT STATUS
PRIMARY_INSTANCE_NAME  STANDBY_DATABASE_NAME  STATUS
         north_sales1            South_Sales  ORA-12541: TNS:no listener
```

The output shows that the listener for the physical standby database is not running. To fix this error, start the listener for the physical standby database `South_Sales`.

Step 4 Check the InconsistentProperties monitorable database property.

The `SHOW DATABASE` output in step 2 also shows a Warning for error ORA-16714. To identify the exact error, use the `InconsistentProperties` monitorable database property:

```
DGMGRL> SHOW DATABASE 'North_Sales' 'InconsistentProperties';
INCONSISTENT PROPERTIES
 INSTANCE_NAME  PROPERTY_NAME   MEMORY_VALUE SPFILE_VALUE BROKER_VALUE
 north_sales1   LogArchiveTrace 511          255          255
```

The current database memory value (511) is different from both the server parameter file (SPFILE) value (255) and the Data Guard broker's property value (255). If you decide the database memory value is correct, you can update the Data Guard broker's property value using the following command:

```
DGMGRL> EDIT DATABASE 'North_Sales' SET PROPERTY 'LogArchiveTrace'=511;
Property "LogArchiveTrace" updated
```

This command will result in the broker updating the SPFILE value so that the value of `LogArchiveTrace` is kept consistent.

Step 5 Check the InconsistentLogXptProps monitorable database property.

Another warning shown in the `SHOW DATABASE` display in Step 2 is ORA-16715. To identify the inconsistent values for the redo transport database property, `ReopenSecs`, you can use the `InconsistentLogXptProps` monitorable database property:

```
DGMGRL> SHOW DATABASE 'North_Sales' 'InconsistentLogXptProps';
INCONSISTENT LOG TRANSPORT PROPERTIES
 INSTANCE_NAME  STANDBY_NAME  PROPERTY_NAME  MEMORY_VALUE  BROKER_VALUE
   south_sales1   South_Sales     ReopenSecs           600           300
```

The current database memory value (600) is different from the Data Guard broker's property value (300). If you think the broker's property value is correct, you can fix the inconsistency by re-editing the property of the standby database with the same value, as shown in the following example:

```
DGMGRL> EDIT DATABASE 'South_Sales' SET PROPERTY 'ReopenSecs'=300;
Property "ReopenSecs" updated
```

You can also reenable the standby database or reset the state of the primary database to `TRANSPORT-ON` to fix this inconsistency.

7

Data Guard Command-Line Interface Reference

The Data Guard command-line interface (DGMGRL) enables you to manage a Data Guard broker configuration and its databases directly from the command line, or from batch programs or scripts. You can use the Data Guard command-line interface as an alternative to Oracle Enterprise Manager for managing a Data Guard configuration.

This chapter contains the following sections, which provide reference information for the Data Guard command-line interface:

- Starting the Data Guard Command-Line Interface
- Exiting the Data Guard Command-Line Interface

7.1 Starting the Data Guard Command-Line Interface

To run DGMGRL, you must have `SYSDBA` privileges.

Start the command-line interface by entering `dgmgrl` at the command-line prompt on a system where Oracle is installed:

```
% dgmgrl
```

The DGMGRL command prompt is displayed:

```
DGMGRL>
```

7.1.1 DGMGRL Optional Parameters

You can supply optional parameters on the command line to indicate how you want the Data Guard command-line interface to display output such as command prompts, banners, and messages.

Additionally, a single command mode is available. In this mode, DGMGRL executes one command and exits upon the completion of the command. The exit code is the result of the command. If the exit code is 0, the command completed successfully. Otherwise, there was an error.

The command line of DGMGRL appears as follows:

```
% dgmgrl [<options>] [<logon> [<command>] ]
```

Specify any of the following keywords when you invoke the DGMGRL command-line interface:

- `<options>` can be one of the following choices:
  - `-echo`

Displays command input and output to the default display device. If you do not use this parameter, only the output from the command is displayed.

– `-logfile` *<file-spec>* "*<dgmgrl-command>*"

Specifies a file into which you can capture the actions of the DGMGRL command-line interface. This is particularly useful when DGMGRL is being invoked to serve as the fast-start failover *observer*. See the "START OBSERVER" command for more information.

See Also:

- The "START OBSERVER" command
- Section 9.5.3, "Capturing Observer Actions in the Observer Log File"

– `-silent`

Suppresses the display of the DGMGRL (`DGMGRL>`) command prompt on your default display device. This option is useful if you are directing the command output to a file or to another display tool.

- `<logon>` is:

  – `username [@connect-identifier]`

  To connect to the database, enter a `username` and optionally, a `connect-identifier`. You will then be prompted for a password. The `connect-identifier` is a fully specified connect descriptor or a name to be resolved by an Oracle naming method (for example, TNS).

  WARNING: Including a password on the command line when invoking DGMGRL is a security risk. This risk can be avoided either by omitting the password when invoking DGMGRL and entering it when prompted, or by using an external authentication method.

  – You can connect as '/' when using operating-system authentication (remote database restarts will not work), Secure Sockets Layer (SSL) protocol, or database credentials stored in a wallet.

- `<command>` is a single command.

  For example:

  ```
  % dgmgrl sys/ "show database 'North_Sales'"
  ```

  `Password`: *password*

The following subsections specify the command format that you enter at the `DGMGRL>` command prompt.

7.1.2 DGMGRL Command Format and Parameters

The DGMGRL commands allow you to create and maintain one broker configuration at a time. A broker configuration can consist of a primary database and up to 30 standby databases.

After you invoke the command-line interface, you can enter any of the DGMGRL commands listed in Table 7–1. Each command and its associated parameters are described in detail in later sections of this chapter.

Table 7–1 Summary of DGMGRL Commands

Command	Effect
ADD DATABASE	Adds a new standby database profile to the existing broker configuration.
CONNECT	Connects to the specified database using the specified username.
CONVERT DATABASE	Converts the specified database to either a snapshot standby database or a physical standby database.
CREATE CONFIGURATION	Creates a broker configuration and adds a primary database profile to the configuration.
DISABLE CONFIGURATION	Disables broker management of a configuration so that the configuration and all of its databases are no longer managed by the broker.
DISABLE DATABASE	Disables broker management of the named standby database.
DISABLE FAST_START FAILOVER	Disables fast-start failover.
DISABLE FAST_START FAILOVER CONDITION	Allows a user to remove conditions for which a fast-start failover should be performed.
EDIT CONFIGURATION (Property)	Changes the value of a property for the broker configuration.
EDIT CONFIGURATION (Protection Mode)	Changes the current protection mode setting for the broker configuration.
EDIT DATABASE (Property)	Changes the value of a property for the named database.
EDIT DATABASE (Rename)	Changes the name used by the broker to refer to the specified database.
EDIT DATABASE (State)	Changes the state of the specified database.
EDIT INSTANCE (AUTO PFILE)	Sets the name of the initialization parameter file for the specified instance.
EDIT INSTANCE (Property)	Changes the value of a property for the specified instance.
ENABLE CONFIGURATION	Enables broker management of the broker configuration and all of its databases.
ENABLE DATABASE	Enables broker management of the specified database.
ENABLE FAST_START FAILOVER	Enables the broker to automatically failover from the primary database to a target standby database.
ENABLE FAST_START FAILOVER CONDITION	Allows a user to add conditions for which a fast-start failover should be performed.
EXIT	Exits the Data Guard command-line interface.
FAILOVER	Performs a database failover operation in which the standby database, to which DGMGRL is currently connected, fails over to the role of primary database.
HELP	Displays online help for the Data Guard command-line interface.
QUIT	Quits the Data Guard command-line interface.
REINSTATE DATABASE	Reinstates the database after a failover.

Table 7–1 (Cont.) Summary of DGMGRL Commands

Command	Effect
REMOVE CONFIGURATION	Removes the broker configuration including all of its database profiles from the broker configuration file.
REMOVE DATABASE	Removes the specified standby database profile from the broker configuration.
REMOVE INSTANCE	Removes knowledge of an instance from an existing database profile in the broker configuration.
SHOW CONFIGURATION	Displays information about the broker configuration.
SHOW DATABASE	Displays information about the specified database.
SHOW FAST_START FAILOVER	Displays all fast-start failover related information.
SHOW INSTANCE	Displays information about the specified instance.
SHUTDOWN	Shuts down a currently running Oracle database.
START OBSERVER	Starts the observer.
STARTUP	Starts an Oracle instance with the same options as SQL*Plus, including mounting and opening a database.
STOP OBSERVER	Stops the observer.
SWITCHOVER	Performs a switchover operation in which the current primary database becomes a standby database, and the specified standby database becomes the primary database.

7.1.3 DGMGRL Command Usage Notes

To use DGMGRL, the following must be true:

- The `DG_BROKER_START` dynamic initialization parameter is set to `TRUE`.
- To enable broker operations that require restarting instances without manual intervention, Oracle Net Services must be configured on each of the hosts that contain the primary and standby database instances. Specifically, the listener.ora file must contain static configuration information about the instance. The `GLOBAL_DBNAME` attribute must be set to *`db_unique_name`*`_DGMGRL.`*`db_domain`*. See Section 2.2 for additional information.
- The Connect Identifier used while creating the configuration or adding a database, must be resolvable from any of the hosts in the configuration.

  See Also: Chapter 6 for more information about preparing and starting Oracle Data Guard broker. See the *Oracle Database Administrator's Guide* for more information about setting up the network files and listener on the standby database.

- You must have SYSDBA privileges to use the Data Guard command-line interface. Do not include `AS SYSDBA` on the `CONNECT` command because SYSDBA is the default setting for this command.
- If you specify more than one option on the command, you can specify the options in any order.
- A semicolon is required at the end of each DGMGRL command.
- Characters specified in a DGMGRL command string value are interpreted as lowercase characters, unless enclosed in double (") or single (') quotation marks.

For example, database and DatAbaSe are equivalent, but "database" and "DatAbaSe" are not.

- You can use the backslash (\) to escape a single quotation mark ('), a double quotation mark ("), and the backslash character (\) itself if these characters appear in a character string.
- Some operations on a broker configuration may require that one or more databases be shut down and restarted. In most cases, DGMGRL will automatically shut down and restart a given database for you if the following are true:
  - The *instance-name* is the SID (this applies to Enterprise Manager as well as DGMGRL).
  - The broker must be able to connect to the database using the same credentials given in the last CONNECT command, even if the last CONNECT command was used to connect to another database.

Command Examples

Example 1

This example demonstrates how to connect to the DGMGRL command-line interface on a local system.

```
% dgmgrl
.
.
.
Welcome to DGMGRL, type "help" for information.

DGMGRL> CONNECT sys;
Password: password
Connected.
```

Example 2

This example demonstrates how to connect to the Data Guard (DGMGRL) command-line interface on a remote system.

```
DGMGRL> CONNECT sys@remote-stby;
Password: password
Connected.
```

7.2 Exiting the Data Guard Command-Line Interface

When you are done working with the command-line interface and want to return to the operating system, enter the EXIT or QUIT command at the DGMGRL command prompt. For example:

```
DGMGRL> EXIT;
```

ADD DATABASE

Creates a new standby database profile and adds it to the existing broker configuration. The `AS CONNECT IDENTIFIER` clause is optional. If you do not specify this clause, the broker will search the `LOG_ARCHIVE_DEST_n` initialization parameters on the primary database for an entry that corresponds to the database being added.

The `MAINTAINED AS` clause allows you the option of specifying the standby database type. Otherwise, the broker automatically determines whether the standby database type is a physical, logical, or snapshot standby database.

Format

ADD DATABASE *database-name*

[AS CONNECT IDENTIFIER IS *connect-identifier*]

Command Parameters

database-name
The name that will be used by the broker to refer to this standby database. It must match (case-insensitive) the value of the corresponding database `DB_UNIQUE_NAME` initialization parameter.

connect-identifier
A fully specified connect descriptor or a name to be resolved by an Oracle Net Services naming method (for example, TNS). The value you specify is also used as the initial value of the `DGConnectIdentifier` database property. If you do not specify this option, the broker will search the primary database `LOG_ARCHIVE_DEST_n` parameters for a corresponding entry to the standby database and use its `SERVICE` value for the connect-identifier.

Usage Notes

- To issue this command, you must connect to the primary database or to an enabled standby database that is already in the configuration.
- The broker uses the specified `connect-identifier` to communicate with the specified database from other databases. Therefore, you must ensure that the `connect-identifier` can be used to address the specified database from all databases in your configuration. For example, if TNS is used as the naming method, you must ensure that the tnsnames.ora file on every database and instance that is part of the configuration contains an entry for the `connect-identifier`. The connect identifier must resolve to the same connect descriptor. If the database that is being added is an Oracle RAC database, the `connect-identifier` provided here must reach all instances of the Oracle RAC, preferably with `FAILOVER` attributes set.

  See Also: *Oracle Database Net Services Administrator's Guide*

- If the connection cannot be made, the broker does not add the new database to the configuration.
- The `MAINTAINED AS` clause is deprecated in this release. The broker will determine standby database type automatically.

Command Example

Example 1

The following example shows how to add a database named `South_Sales`.

```
DGMGRL> ADD DATABASE South_Sales AS CONNECT IDENTIFIER IS South_Sales.example.com;
Database "South_Sales" added
```

CONNECT

Connects a given username to the specified database.

Format

CONNECT *username* [@*connect-identifier*];

Command Parameters

username
Represents the username with which you want to connect to the database. You will be prompted for a password after you enter a username and optionally, a connect-identifier.

connect-identifier
This parameter is optional. It is an Oracle Net Services connect identifier for the database to which you want to connect. The exact syntax depends upon the Oracle Net Services communications protocol your Oracle installation uses.

Usage Notes

- The username and password must be valid for the database to which you are trying to connect. The username you specify must have the SYSDBA privilege. You do not have to include `AS SYSDBA` on the `CONNECT` command because SYSDBA is the default setting for this command.
- If the `CONNECT` command returns an error, check to see that you specified a valid `connect-identifier`.

Command Examples

Example 1

This example connects to the default database on the local system.

```
DGMGRL> CONNECT sys;
Password: password
Connected.
```

Example 2

This example connects to a remote database whose `connect-identifier` is `North_Sales.example.com`.

```
DGMGRL> CONNECT sys@North_Sales.example.com;
Password: password
Connected.
```

Example 3

This example connects to a database using `CONNECT '/'` so that connection credentials are not visible on the command line:

```
DGMGRL> CONNECT /@North_Sales.example.com;
```

You must set up Oracle Wallet or SSL to use `CONNECT '/'`. By setting up Oracle Wallet or SSL, you can write a script to securely start and run the observer as a background job without specifying database credentials in the script.

See Also: *Oracle Database Advanced Security Administrator's Guide* for more information about Oracle Wallet and SSL

CONVERT DATABASE

Converts a physical standby database to a snapshot standby database, or reverts the snapshot standby database back to a physical standby database.

A snapshot standby database is a fully updatable standby database. Like a physical or logical standby database, a snapshot standby database receives and archives redo data from a primary database. Unlike a physical or logical standby database, a snapshot standby database does not apply the redo data that it receives. The redo data received by a snapshot standby database is not applied until the snapshot standby is converted back into a physical standby database, after first discarding any local updates made to the snapshot standby database.

A snapshot standby database is best used in scenarios that require a temporary, updatable snapshot of a physical standby database. Note that because redo data received by a snapshot standby database is not applied until it is converted back into a physical standby, the time needed to perform a role transition is directly proportional to the amount of redo data that needs to be applied.

See *Oracle Data Guard Concepts and Administration* for additional information about snapshot standby databases.

Format

CONVERT DATABASE *db_unique_name* TO {SNAPSHOT | PHYSICAL} STANDBY;

Usage Notes

- A physical standby database cannot be converted to a snapshot standby database if it is the target of a fast-start failover. The `ORA-16668: operation cannot be performed on the fast-start failover target standby database` error will be returned.
- Use the DGMGRL ADD DATABASE command to import an existing snapshot standby database into a Data Guard broker configuration.
- A snapshot standby database cannot be the target of a switchover or a fast-start failover.
- A snapshot standby database can be the target of a manual failover if fast-start failover is disabled.
- You can use the `SHOW CONFIGURATION` or `SHOW DATABASE` command to verify the conversion result. For example:

```
DGMGRL> SHOW CONFIGURATION;

Configuration - DRSolution

  Protection Mode: MaxPerformance
  Databases:
    North_Sales  - Primary database
    South_Sales  - Snapshot standby database

Fast-Start Failover: DISABLED

Configuration Status:
SUCCESS
```

- After a snapshot standby database is converted back to a physical standby database, it will be in the default state for a physical standby database, `APPLY-ON`.

Command Examples

Example 1

Issue the following to convert a physical standby database to a snapshot standby database:

```
DGMGRL> CONVERT DATABASE 'South_Sales' to SNAPSHOT STANDBY;
Converting database "South_Sales" to a Snapshot Standby database, please wait...
Database "South_Sales" converted successfully
```

Example 2

Issue the following to convert the snapshot standby database back to a physical standby database:

```
DGMGRL> CONVERT DATABASE 'South_Sales' to PHYSICAL STANDBY;
Converting database "South_Sales" to a Physical Standby database, please wait...
Operation requires shutdown of instance "south_sales1" on database "South_Sales"
Shutting down instance "south_sales1"...
Database closed.
Database dismounted.
ORACLE instance shut down.
Operation requires startup of instance "south_sales1" on database "South_Sales"
Starting instance "south_sales1"...
ORACLE instance started.
Database mounted.
Continuing to convert database "South_Sales" ...
Operation requires shutdown of instance "south_sales1" on database "South_Sales"
Shutting down instance "south_sales1"...
ORA-01109: database not open

Database dismounted.
ORACLE instance shut down.
Operation requires startup of instance "south_sales1" on database "South_Sales"
Starting instance "south_sales1"...
ORACLE instance started.
Database mounted.
Database "South_Sales" converted successfully
```

CREATE CONFIGURATION

Creates a new broker configuration and adds a primary database profile to the configuration.

Format

CREATE CONFIGURATION *configuration-name* AS

PRIMARY DATABASE IS *database-name*

CONNECT IDENTIFIER IS *connect-identifier;*

Command Parameters

configuration-name
A user-friendly name for the configuration you are creating. Valid names contain any alphanumeric characters. If spaces are included in the name, the name must be enclosed in double or single quotation marks. The name must consist of 30 or fewer bytes.

database-name
The name that will be used by the broker to refer to the primary database. It must match (case-insensitive) the value of the primary database `DB_UNIQUE_NAME` initialization parameter.

connect-identifier
A fully specified connect descriptor or a name to be resolved by an Oracle Net Services naming method (for example, TNS). The value you specify is also used as the initial value of the `DGConnectIdentifier` database property. If you do not specify this option, the broker will search the primary database `LOG_ARCHIVE_DEST_`*n* parameters for a corresponding entry to the standby database and use its `SERVICE` value for the connect-identifier.

Usage Notes

- A broker configuration is a named collection of one or more databases that you want to manage as a group. You must specify a value for each of the command parameters. There are no default values.
- You must connect to the primary database to issue this command.
- The broker uses the specified `connect-identifier` to communicate with the specified database from other databases. Therefore, you must ensure that the `connect-identifier` can be used to address the specified database from all databases in your configuration. For example, if TNS is used as the naming method, you must ensure that the tnsnames.ora file on every database and instance that is part of the configuration contains an entry for the `connect-identifier`. The connect identifier must resolve to the same connect descriptor. If the database that is being added is an Oracle RAC database, the `connect-identifier` provided here must reach all instances of the Oracle RAC, preferably with `FAILOVER` attributes set.

See Also: *Oracle Database Net Services Administrator's Guide*

- To add standby databases after you create the broker configuration, use the ADD DATABASE command.

Command Example

Example 1

The following example creates a new broker configuration named `DRSolution` with a primary database named `North_Sales`.

```
DGMGRL> CREATE CONFIGURATION 'DRSolution' AS
> PRIMARY DATABASE IS 'North_Sales'
> CONNECT IDENTIFIER IS North_Sales.example.com;
Configuration "DRSolution" created with primary database "North_Sales"
```

DISABLE CONFIGURATION

Disables broker management of a configuration so that the configuration and all of its databases are no longer managed by the broker.

Format

DISABLE CONFIGURATION;

Command Parameters

None.

Usage Notes

- A disabled configuration and all of its constituent databases are no longer managed by the broker.
- The only way to disable broker management of the primary database is to use the `DISABLE CONFIGURATION` command.
- This command does not remove the broker configuration from the configuration file. See the REMOVE CONFIGURATION command for more information about removing the configuration.
- You can edit database properties and modify the configuration's protection mode while the configuration is disabled. However, any changes made to properties or to the protection mode will not take effect until the configuration is enabled.
- This command cannot be executed if fast-start failover is enabled.

Command Example

Example 1

The following example disables management of the broker configuration and all of its databases.

```
DGMGRL> DISABLE CONFIGURATION;
Disabled.
```

DISABLE DATABASE

Disables broker management of the named standby database. This means that broker directed state changes will be disallowed for this database, and the broker will not monitor the database for health status or for monitorable database properties.

Format

DISABLE DATABASE *database-name*;

Command Parameter

database-name
Name of the standby database to be disabled.

Usage Notes

- You cannot specify the name of a primary database.
- Use the `DISABLE CONFIGURATION` command to disable the primary and all standby databases.
- If the sole standby database is disabled, you have no failover option. This standby database is not viable for failover until it is reenabled.
- This command cannot be used to disable the fast-start failover target database when fast-start failover is enabled.

Command Example

Example 1

The following example shows how to disable a database named `South_Sales`.

```
DGMGRL> DISABLE DATABASE 'South_Sales';
Disabled.
```

DISABLE FAST_START FAILOVER

Disables fast-start failover and prevents the observer from initiating a failover to the target standby database. See Section 5.5.5, "Disabling Fast-Start Failover" for additional information.

Format

DISABLE FAST_START FAILOVER [FORCE];

Command Parameters

None.

Usage Notes

- If the primary and target standby database have a network connection, use `DISABLE FAST_START FAILOVER` *without* the `FORCE` option to disable fast-start failover on all databases in the broker configuration. If errors occur during the disable operation, the broker returns an error message and stops the disable operation. You may need to reissue the `DISABLE FAST_START FAILOVER` command with the `FORCE` option to override the error conditions and disable fast-start failover on the database to which you are connected. See Section 5.5.5, "Disabling Fast-Start Failover" for more information.
- Use `DISABLE FAST_START FAILOVER` *with* the `FORCE` option when the network between the primary and target standby databases is disconnected or when the database upon which the command is received does not have a connection with the primary database. The `FORCE` option disables fast-start failover on the database to which you are connected, even when errors occur.
- Disabling fast-start failover with the `FORCE` option on a primary database that is disconnected from the observer and the target standby database does not prevent the observer from initiating a fast-start failover to the target standby database.
- You can disable fast-start failover while connected to any database in the broker configuration so long as connectivity exists between that database and the primary.
- If disabled by force at the target standby database and the connection subsequently resumes with the primary database, fast-start failover is disabled on all databases in the configuration.
- Disabling fast-start failover with the `FORCE` option while connected to the primary will disable fast-start failover on the target standby database if there is network connectivity between both databases.

Command Example

Example 1

The following example shows how to disable fast-start failover.

```
DGMGRL> DISABLE FAST_START FAILOVER;
Disabled.
```

DISABLE FAST_START FAILOVER CONDITION

Allows a user to remove conditions for which a fast-start failover should be performed.

Format

DISABLE FAST_START FAILOVER CONDITION *value*;

Command Parameters

value
Possible values are those described in the `SHOW FAST_START FAILOVER` command as Health Conditions or Oracle error numbers.

Usage Notes

An error will be raised if the condition is not recognized. If the condition has not been set, no error will be raised.

Command Example

Example 1

```
DISABLE FAST_START FAILOVER CONDITION "Corrupted Controlfile";
```

This specifies that the detection of a corrupted controlfile does not automatically initiate an immediate fast-start failover.

Example 2

```
DISABLE FAST_START FAILOVER CONDITION 27102;
```

This specifies that the `ORA-27102` error does not automatically initiate an immediate fast-start failover.

EDIT CONFIGURATION (Property)

Changes the value of a property for the broker configuration.

Format

EDIT CONFIGURATION SET PROPERTY *property-name = value*;

Command Parameter

property-name
The name of a configuration property.

value
The new value for the property.

> **See Also:** Chapter 4 and Chapter 8 for information about configuration properties

Usage Notes

- Issue this command while connected to the primary database or to any standby database in the broker configuration having connectivity to the primary database.
- Use the `SHOW CONFIGURATION` command to display the current property information for the configuration.

Command Example

Example 1

The following example shows how to set the `FastStartFailoverThreshold` configuration property to 90 seconds.

```
DGMGRL> EDIT CONFIGURATION SET PROPERTY FastStartFailoverThreshold=90;
```

EDIT CONFIGURATION (Protection Mode)

Edits the current protection mode setting for the broker configuration.

Format

EDIT CONFIGURATION SET PROTECTION MODE AS *protection-mode*;

Command Parameter

protection-mode
The data protection mode in which you want the configuration to run when the configuration is enabled. The possible protection modes are:

```
MAXPROTECTION
MAXAVAILABILITY
MAXPERFORMANCE
```

Usage Notes

- Before you use the `EDIT CONFIGURATION` command to set the protection mode to either the `MAXPROTECTION` or `MAXAVAILABILITY` mode, ensure that at least one standby database has its `LogXptMode` database property set to `SYNC`.
- The following table shows the configuration protection modes and the minimum corresponding settings for redo transport services:

Protection Mode	Redo Transport	Standby Redo Log Files Needed?	Usable with Fast-Start Failover?
MAXPROTECTION	SYNC	Yes	No
MAXAVAILABILITY	SYNC	Yes	Yes
MAXPERFORMANCE	ASYNC	Yes	Yes

The default protection mode for the configuration is `MAXPERFORMANCE`.

> **See Also:** Chapter 4 for more information about the protection modes and redo transport services

- `MAXAVAILABILITY` or `MAXPERFORMANCE` is required in order to enable fast-start failover.
- This command cannot be executed if fast-start failover is enabled.
- After you change the protection mode, the broker will automatically restart the primary database, if necessary.
- Use the `SHOW CONFIGURATION` command to display the current protection mode for the configuration.

```
DGMGRL> SHOW CONFIGURATION;

Configuration - DRSolution

  Protection Mode: MaxPerformance
  Databases:
    North_Sales  - Primary database
```

```
    South_Sales     - Physical standby database

Fast-Start Failover: DISABLED

Configuration Status:
SUCCESS
```

If broker management of the configuration is disabled when you enter the `EDIT CONFIGURATION` command, the protection mode of the configuration does not take effect until the next time you enable the configuration with the ENABLE CONFIGURATION command.

Command Example

Example 1

The following example shows how to upgrade the broker configuration to the `MAXAVAILABILITY` protection mode.

Verify that standby redo log files are configured on the standby database and that the redo transport service is set to `SYNC`, for example:

```
DGMGRL> EDIT DATABASE 'South_Sales' SET PROPERTY 'LogXptMode'='SYNC';
Property "LogXptMode" updated

DGMGRL> EDIT CONFIGURATION SET PROTECTION MODE AS MAXAVAILABILITY;
Succeeded.
```

EDIT DATABASE (Property)

Changes the value of a property for the named database.

Format

EDIT DATABASE *database-name*

SET PROPERTY *property-name = value*;

Command Parameters

database-name
The name of the database for which you want to change a property value.

property-name
The name of an existing database-specific property. If this is an Oracle RAC database, this property change affects all instances of the database.

> **See Also:** Chapter 4 and Chapter 8 for information about properties.

value
The new value for the property.

> **Caution:** This command can be used to change the value of an instance-specific property if and only if just one instance is known by the broker for the named database. An attempt to use this command to change an instance-specific property when the broker knows of multiple instances of the database will be rejected. It is recommended to only use `EDIT INSTANCE (property)` to change the value of an instance-specific property.

Command Examples

Example 1

Edit a configurable database-specific property at the database level.

```
DGMGRL> EDIT DATABASE 'North_Sales' SET PROPERTY 'ArchiveLagTarget'=1200;
Property "ArchiveLagTarget" updated
```

Example 2

Edit a configurable instance-specific property of a non-Oracle RAC database.

```
DGMGRL> EDIT DATABASE 'South_Sales' SET PROPERTY
> 'StandbyArchiveLocation'='/archfs/arch/';
Property "StandbyArchiveLocation" updated
```

Example 3

Edit a configurable instance-specific property of an Oracle RAC database. This will not succeed because it is not clear to which instance the property change should be applied.

```
DGMGRL> EDIT DATABASE 'North_Sales' SET PROPERTY
```

```
> 'StandbyArchiveLocation'='/archfs/arch/';
Error: ORA-16587: ambiguous object specified to Data Guard broker

Failed.
```

EDIT DATABASE (Rename)

Changes the name used by the broker to refer to the specified database, as recorded in that database's profile in the broker configuration.

Format

EDIT DATABASE *database-name*

RENAME TO *new-database-name*;

Command Parameters

database-name
The name of the database that you want to change.

new-database-name
The name of the new database.

Usage Notes

- Use this command to track changes to the `DB_UNIQUE_NAME` initialization parameter for this database.

  Caution: The *`database-name`* must always match the value for that database's `DB_UNIQUE_NAME` initialization parameter.

- This command can only be done when broker management of the database that you are renaming is disabled.

Command Example

Example 1

The following example shows how to edit and rename a database.

```
DGMGRL> DISABLE DATABASE 'South_Sales_typo';
Disabled.

DGMGRL> EDIT DATABASE 'South_Sales_typo' RENAME TO 'South_Sales';
Succeeded.

DGMGRL> ENABLE DATABASE 'South_Sales';
Enabled.
```

EDIT DATABASE (State)

Changes the state of the specified database.

Format

EDIT DATABASE *database-name*

SET STATE = *state*

[WITH APPLY INSTANCE = *instance-name*];

Command Parameters

database-name
The name of the database for which you want to change the state.

state
The state in which you want the database to be running. The possible states are:

`TRANSPORT-ON` (primary database only)
`TRANSPORT-OFF` (primary database only)
`APPLY-ON` (physical or logical standby database only)
`APPLY-OFF` (physical or logical standby database only)

instance-name
The name of the instance you want to become the apply instance if this is an Oracle RAC standby database.

Usage Notes

- If the target state is `APPLY-ON` and this database is currently a physical or logical standby database, the optional `WITH APPLY INSTANCE` clause specifies which instance will become the apply instance.
- If the target state is not `APPLY-ON` or if the database is currently in the primary role, the `WITH APPLY INSTANCE` clause is ignored even if it is specified.
- You cannot change the state of a snapshot standby database.
- All instances of an Oracle RAC database are affected by this database state change.

Command Example

The following examples show how to change the state of a database.

Example 1

```
DGMGRL> EDIT DATABASE 'South_Sales' SET STATE='APPLY-ON';
Succeeded.
```

EDIT INSTANCE (AUTO PFILE)

Sets the name of the initialization parameter file for the specified instance.

Format

EDIT INSTANCE *instance-name*

[ON DATABASE *database-name*]

SET AUTO PFILE [= { *initialization-file* | OFF }];

Command Parameters

instance-name
The name of the instance (SID) for which you want to specify its initialization parameter file.

database-name
The name of the database to which the `instance-name` is associated.

initialization-file
Executes the startup operation for the instance when a subsequent broker operation requires the instance to be started automatically. If `SET AUTO PFILE` is set to `OFF`, automatic restart of that instance is disabled. When a subsequent operation needs to start that instance, you must start it manually. If you do not specify `SET AUTO PFILE` for the instance, the automatic startup operation looks for the initialization parameter file at the default location.

Usage Notes

- The *`instance-name`* can be unique across the configuration. If *`instance-name`* is not unique, you must specify both the *`database-name`* and the *`instance-name`* to fully identify the instance.
- `SET AUTO PFILE` is valid only for the duration of the current DGMGRL session. You must specify `SET AUTO PFILE` again if you quit and reenter DGMGRL.

Command Example

Example 1

The following example shows how to change the parameter file used to start an instance of a database.

```
DGMGRL> EDIT INSTANCE 'south_sales1' ON DATABASE 'South_Sales'
> SET AUTO PFILE='initsales1.ora';
Instance 'south_sales1' updated
```

EDIT INSTANCE (Property)

Changes the value of an instance-specific property for the specified instance(s).

Format

EDIT INSTANCE

{ {*instance-name* [ON DATABASE *database-name*] } | {* ON DATABASE *database-name*} }

SET PROPERTY *property-name* = *value*;

Command Parameters

instance-name
The name of the instance (SID) for which you want to change an instance-specific property's value. If an asterisk is specified for instance-name, the `ON DATABASE` clause must also be specified and this change will be applied to the specified property for each instance associated with that database. See Chapter 8 for the instance-specific properties that can be changed using the `EDIT INSTANCE * ON DATABASE` *`database-name`* command.

database-name
The name of the database with which the `instance-name` is associated. This must be specified if an asterisk is specified for `instance-name`, or if `instance-name` is not unique across the configuration

property-name
The name of the instance-specific property for which you want to set a new value.

> **See Also:** Chapter 4 and Chapter 8 for information about properties.

value
The new value for the property.

Usage Notes

- The *`instance-name`* can be unique across the configuration. If *`instance-name`* is not unique, you must specify both the *`database-name`* and the *`instance-name`* to fully identify the instance.
- This command cannot be used to change a database-specific property.

Command Examples

Example 1

Edit an instance-specific property.

```
DGMGRL> EDIT INSTANCE 'north_sales1' ON DATABASE 'North_Sales'
> SET PROPERTY 'StandbyArchiveLocation'='/archfs/arch/';
Property "StandbyArchiveLocation" updated.
```

Example 2

Edit a database-specific property. This will not be allowed.

```
DGMGRL> EDIT INSTANCE 'north_sales1' ON DATABASE 'North_Sales'
> SET PROPERTY 'LogXptMode'='SYNC';
Error: ORA-16586: cannot change database property with EDIT INSTANCE command

Failed.
```

Example 3

Change the value of an instance-specific property for all instances of an Oracle RAC database:

```
DGMGRL> EDIT INSTANCE * ON DATABASE 'North_Sales' LogArchiveTrace=4095;
```

ENABLE CONFIGURATION

Enables the broker to actively manage the broker configuration including all of its databases.

Format

ENABLE CONFIGURATION;

Command Parameters

None.

Usage Notes

- Use this command to enable broker management of the primary database and all standby databases, if these standby database are not explicitly disabled by the user.
- You must connect to the primary database to issue this command.
- By default, broker management of the configuration's databases is enabled in the `TRANSPORT-ON` state with redo transport services turned on at the primary database and `APPLY-ON` with log apply services started at the standby databases. You can change the state of a database using the EDIT DATABASE (State) command, but not when the database or the entire configuration is disabled.
- Use the SHOW CONFIGURATION command to display information about the configuration.

Command Example

Example 1

The following example enables management of a broker configuration.

```
DGMGRL> ENABLE CONFIGURATION;
Enabled.
```

ENABLE DATABASE

Enables broker management of the specified standby database.

> **Caution:** Do not issue the `ENABLE DATABASE` command on a standby database that needs to be reinstated. See Section 5.4.3 for more details.

Format

ENABLE DATABASE *database-name*;

Command Parameter

database-name
The name of the standby database for which you want to enable broker management.

Usage Notes

- You must connect to the primary database or to an already enabled standby database to issue this command.
- A standby database may have been disabled by the broker as a consequence of a prior failover or switchover operation. See Section 5.4.3 to understand how the database can be reinstated or re-created.
- By default, broker management of the physical or logical standby database is enabled in the `APPLY-ON` state with log apply services enabled. You can change the state of the standby database using the EDIT DATABASE (State) command, but only when the database is enabled.
- Use the SHOW DATABASE command to display information about the database.
- For an Oracle RAC database, only one instance is required to be started and mounted for this command to succeed.

Command Example

Example 1

The following example shows how to enable a database named `South_Sales`.

```
DGMGRL> ENABLE DATABASE 'South_Sales';
Enabled.
```

ENABLE FAST_START FAILOVER

Enables the broker to fail over to a specifically-chosen standby database in the event of loss of the primary database, without requiring you to perform any manual steps to invoke the failover. See Section 5.5.2, "Enabling Fast-Start Failover" for complete information.

Format

ENABLE FAST_START FAILOVER;

Command Parameters

None.

Usage Notes

- The prerequisites described in Section 5.5.1 must be met before you issue this command to enable fast-start failover.
- Issuing the `ENABLE FAST_START FAILOVER` command does not trigger a failover, it only allows the observer that is monitoring the configuration to initiate a fast-start failover if conditions warrant a failover.
- You can enable fast-start failover while connected to any database in the broker configuration.
- If you do not start the observer after you have enabled fast-start failover, the `ORA-16819` warning is displayed for the primary and target standby databases. For example:

```
DGMGRL> SHOW DATABASE 'South_Sales';
Database - South_Sales

  Role:            PRIMARY
  Intended State:  TRANSPORT-ON
  Instance(s):
    south_sales1

  Database Warning(s):
    ORA-16819: fast-start failover observer not started

Database Status:
WARNING
```

- To enable fast-start failover for a broker configuration with multiple standby databases, the `FastStartFailoverTarget` configuration property on the primary database must be set to point to the desired target standby database. Both the primary database and the target standby database must have:
  - Standby redo logs configured
  - Either the `LogXptMode` database property set to `SYNC` and protection mode set to `MAXAVAILABILITY`, or the `LogXptMode` property set to `ASYNC` and the protection mode set to `MAXPERFORMANCE`
  - Flashback Database enabled on both the primary and standby databases

  Step 2 in Section 5.5.2 and Section 8.3.9 provide more information about the `FastStartFailoverTarget` configuration property.

- Once you have enabled fast-start failover, you must comply with the restrictions described in Section 5.5.2.2, "Restrictions When Fast-Start Failover is Enabled".

Command Example

Example 1

The following example enables fast-start failover.

```
DGMGRL> ENABLE FAST_START FAILOVER;
Enabled.
```

Example 2

The following example shows that fast-start failover was successfully enabled when the configuration is operating in maximum performance mode.

```
DGMGRL> SHOW FAST_START FAILOVER;

Fast-Start Failover: ENABLED
 Threshold:           30 seconds
 Target:              South_Sales
 Observer:            (none)
 Lag Limit:           30 seconds
 Shutdown Primary:    TRUE
 Auto-reinstate:      TRUE

Configurable Failover Conditions
 Health Conditions:
   Corrupted Controlfile          YES
   Corrupted Dictionary           YES
   Inaccessible Logfile            NO
   Stuck Archiver                  NO
   Datafile Offline               YES

 Oracle Error Conditions:
   (none)
```

ENABLE FAST_START FAILOVER CONDITION

Specifies additional conditions for which a fast-start failover should be performed.

Format

ENABLE FAST_START FAILOVER CONDITION *value*;

Command Parameters

value
Possible values are those described in the `SHOW FAST_START FAILOVER` command as Health Conditions or Oracle error numbers.

Usage Notes

- Possible values are the set maintained by the database health-check facility or a number corresponding to any ORA-xxxx error.
- While the conditions maintained by the health-check facility are subject to change in the future, some common examples are shown in Table 7–2:

Table 7–2 Examples of Health Conditions

Health Condition	Description
"Datafile Offline"	Data file offline due to a write error.
"Corrupted Controlfile"	Corrupted controlfile.
"Corrupted Dictionary"	Dictionary corruption of a critical database object.
"Inaccessible Logfile"	LGWR is unable to write to any member of a log group due to an I/O error.
"Stuck Archiver"	Archiver is unable to archive a redo log because device is full or unavailable.

The following are enabled by default: "Datafile Offline," "Corrupted Controlfile," and "Corrupted Dictionary." An error will be raised if the specified value is not recognized. If the condition has already been set, no error will be raised.

- You can display these configurable conditions with the `SHOW FAST_START FAILOVER` command.

Command Example

Example 1

```
ENABLE FAST_START FAILOVER CONDITION "Corrupted Controlfile";
```

This specifies that a fast-start failover should be done if a corrupted controlfile is detected.

Example 2

```
ENABLE FAST_START FAILOVER CONDITION 27102;
```

This specifies that a fast-start failover should be done if an `ORA-27102` error is raised.

EXIT

Exits (quits) the command-line interface.

Format

EXIT;

Command Parameters

None.

Usage Notes

- This command has the same effect as the QUIT command.
- A database connection is not required to execute this command. However, if you are connected, this command breaks the connection.

Command Example

Example 1

The following example demonstrates how to exit (quit) the command-line interface.

```
DGMGRL> EXIT;
```

FAILOVER

Invokes a failover that transitions the named (target) standby database into the role of a primary database. This type of failover is referred to as *manual failover*. See Section 5.4, "Manual Failover" for more information.

> **Note:** Because a failover results in a transition of a standby database to the primary role, it should be performed when the primary database has failed or is unreachable and cannot be recovered in a timely manner. Failover may or may not result in data loss depending on the protection mode in effect at the time of the failover and whether the target standby database was synchronized with the primary database.
>
> Use the `SWITCHOVER` command if the primary database has not failed and you want the current primary database and a standby database to switch roles with no data loss.

Format

FAILOVER TO *database-name*

[IMMEDIATE];

Command Parameters

database-name
The name of a physical, logical, or snapshot standby database that you want to fail over to the primary database role.

Usage Notes

- The specified standby database must be enabled before the primary database fails. However, an enabled standby database that was shut down can be a candidate for the failover operation. In this case, restart the standby database using DGMGRL `STARTUP` command, then issue the `FAILOVER` command.
- The failover operates on the specified standby database and changes its role to a primary database. Bystander standby databases (those not involved in the failover) remain in the standby role.
- Before you issue the `FAILOVER` command, verify that you are connected to the standby database that will become the new primary database. If necessary, issue a CONNECT command to connect to the standby database to which you want to failover.
- If the `FAILOVER` command is issued without any options, the standby database chosen as the failover target applies all unapplied redo it has received before changing to the primary role. This is referred to as a complete failover.
- If the broker configuration is operating in maximum protection mode, a manual failover operation will force the protection mode to be maximum performance. The redo transport service settings are unaffected. You need to restore the desired protection mode for the resulting configuration after the failover operation.

Note: With fast-start failover, the broker preserves the protection mode that was in effect prior to the failover. The broker configuration cannot be in maximum protection mode while fast-start failover is enabled.

- If the `FAILOVER` command is issued with the `IMMEDIATE` option, no attempt is made to apply any unapplied redo that has been received. This option more likely results in lost application data even when standby redo log files are configured on the standby database. Additionally, any remaining standby databases in the configuration cannot function as such until they are reinstated or re-created. See Section 5.4.3 for more information.
- You can perform a manual failover or set up the broker to perform a fast-start failover. See the ENABLE FAST_START FAILOVER command for information about allowing the broker to automatically invoke failover, when conditions warrant a failover.
- If fast-start failover is enabled, you can perform a *complete* manual failover only to the fast-start failover target standby database and only if the fast-start failover target standby database is synchronized with, or within the lag limit of, the primary database, and only when the observer is started. You cannot perform an *immediate* manual failover when fast-start failover is enabled.
- If Flashback Database was enabled on the former (failed) primary database prior to the failover, the former primary database can be reinstated using the broker's `REINSTATE` command (see the REINSTATE DATABASE command on page 7-40).

  If failover was performed to a physical standby database, any other physical standby databases that were disabled by the failover can be reinstated if Flashback Database was enabled on the standby database and there are sufficient flashback logs available. See Section 5.4.3, "Reenabling Disabled Databases After a Role Change" for step-by-step instructions.
- The original primary database can only participate in the configuration as a standby database after it is reinstated or re-created.

Caution: You should shut down the original primary database if it still has any active instances running prior to failing over.

See Also: Section 5.4.3 about reenabling the original primary database so that it could serve as a standby database to the primary database

Command Examples

Example 1

The following example performs a failover in which the standby database, `South_Sales`, transitions to the primary role:

```
DGMGRL> FAILOVER TO 'South_Sales';
Performing failover NOW, please wait...
Failover succeeded, new primary is "South_Sales"

DGMGRL> SHOW CONFIGURATION;
Configuration - DRSolution
```

```
  Protection Mode: MaxPerformance
  Databases:
    South_Sales - Primary database
    North_Sales - Physical standby database (disabled)
      ORA-16661: the standby database needs to be reinstated

Fast-Start Failover: DISABLED

Configuration Status:
WARNING
```

HELP

Displays online help for the Data Guard command-line interface.

Format

HELP [*topic*];

Command Parameter

topic
The topic for which you want to display help information. If you do not specify a topic, the command lists all of the topics and the format. Valid topics are:

```
ADD
CONNECT
CONVERT
CREATE
DISABLE
EDIT
ENABLE
EXIT
FAILOVER
HELP
QUIT
REINSTATE
REM
REMOVE
SHOW
SHUTDOWN
START
STARTUP
STOP
SWITCHOVER
```

Usage Notes

- A database connection is not required to execute this command.

Command Examples

Example 1
The following example gets help on the `EDIT` commands.

```
DGMGRL> HELP EDIT;

Edits a configuration, database, or instance

Syntax:

  EDIT CONFIGURATION SET PROTECTION MODE AS
    {MaxProtection|MaxAvailability|MaxPerformance};

  EDIT CONFIGURATION SET PROPERTY <property name> = <value>;
```

```
EDIT DATABASE <database name> SET PROPERTY <property name> = <value>;

EDIT DATABASE <database name> RENAME TO <new database name>;

EDIT DATABASE <database name> SET STATE = <state>
  [WITH APPLY INSTANCE = <instance name>];

EDIT INSTANCE <instance name> [ON DATABASE <database name>]
  SET AUTO PFILE [ = {<initialization file path>|OFF} ];

EDIT INSTANCE <instance name> [ON DATABASE <database name>]
  SET PROPERTY <property name> = <value>;

EDIT INSTANCE * ON DATABASE <database name>
  SET PROPERTY <property name> = <value>;
```

QUIT

Quits (exits) the Data Guard command-line interface.

Format

QUIT;

Command Parameters

None.

Usage Notes

- This command has the same effect as the EXIT command.
- A database connection is not required to execute this command. However, if you are connected, this command breaks the connection.

Command Example

Example 1

The following example shows how to quit (exit) the command-line interface.

```
DGMGRL> QUIT;
```

REINSTATE DATABASE

Reinstates a database as a new standby database in the broker configuration for the current primary database.

Format

REINSTATE DATABASE *database-name*;

Command Parameter

database-name
The name of the database that is to be reinstated in the broker configuration.

Usage Notes

- If the conditions for reinstatement described in Section 5.5.8 are not satisfied, the reinstatement will fail with an appropriate error status and the specified database will remain disabled.
- If the `database-name` specified is that of the old primary and fast-start failover is enabled, the old primary database will be reinstated as a standby to the new primary, and the fast-start failover environment will be updated to reflect the availability of the new standby database. It will accept redo data from the new primary database and be the target of a fast-start failover should the new primary database fail. Reinstatement occurs automatically if the observer is running unless the `FastStartFailoverAutoReinstate` configuration property is set to `FALSE`.
- This command does not require that fast-start failover be enabled. It can be used to reinstate an old primary database after a complete manual failover has been performed. It can also be used to reinstate a bystander standby database that had been disabled after either a complete or immediate failover.
- Issue this command while connected to any database in the broker configuration, except the database that is to be reinstated.

Command Examples

Example 1

The following example reinstates the `South_Sales` database as a standby database in the broker configuration.

```
DGMGRL> REINSTATE DATABASE 'North_Sales';
Reinstating database "North_Sales", please wait...
Operation requires shutdown of instance "north_sales1" on database "North_Sales"
Shutting down instance "north_sales1"...
ORA-01109: database not open

Database dismounted.
ORACLE instance shut down.
Operation requires startup of instance "north_sales1" on database "North_Sales"
Starting instance "north_sales1"...
ORACLE instance started.
Database mounted.
Continuing to reinstate database "North_Sales" ...
Reinstatement of database "North_Sales" succeeded
```

REMOVE CONFIGURATION

Removes all of the broker configuration information, including all database profiles, from the Data Guard broker configuration file, and terminates broker management of all of the databases associated with the broker configuration.

> **Caution:** When you use the `REMOVE CONFIGURATION` command, all profile information is deleted from the Data Guard broker configuration file and cannot be recovered.

Format

REMOVE CONFIGURATION [PRESERVE DESTINATIONS];

Command Parameters

None.

Usage Notes

- When you remove a broker configuration, management of all of the databases associated with that configuration is disabled.
- By default, the command removes the corresponding broker settings of the `LOG_ARCHIVE_DEST_`*n* initialization parameter on the primary database and the `LOG_ARCHIVE_CONFIG` initialization parameters on all databases in the configuration. To preserve these settings, use the `PRESERVE DESTINATIONS` option.
- This command does not remove or affect the actual primary or standby database instances, databases, datafiles, control files, initialization parameter files, server parameter files, or log files of the underlying Data Guard configuration.
- You cannot remove the configuration when fast-start failover is enabled.

Command Example

The following examples show a successful and an unsuccessful `REMOVE CONFIGURATION` command.

Example 1 Successful REMOVE CONFIGURATION Command

The following command shows how to remove configuration information from the configuration file.

```
DGMGRL> REMOVE CONFIGURATION;
Removed configuration
DGMGRL> SHOW CONFIGURATION;
Error: ORA-16532: Data Guard broker configuration does not exist

Configuration details cannot be determined by DGMGRL
```

Example 2 Unsuccessful REMOVE CONFIGURATION Command

The following command is unsuccessful because fast-start failover is enabled.

```
DGMGRL> REMOVE CONFIGURATION;
Error: ORA-16654: fast-start failover is enabled

Failed.
```

```
DGMGRL> SHOW CONFIGURATION;

Configuration - The SUPER cluster

  Protection Mode: MaxAvailability
  Databases:
    North_Sales  - Primary database
    South_Sales  - (*) Physical standby database

Fast-Start Failover: ENABLED

Configuration status:
SUCCESS
```

REMOVE DATABASE

Removes the specified standby database's profile from the broker configuration and terminates broker management of the standby database.

> **Caution:** When you use the `REMOVE DATABASE` command, the database's profile information is deleted from the broker configuration file and cannot be recovered.

Format

REMOVE DATABASE *database-name* [PRESERVE DESTINATIONS];

Command Parameter

database-name
The name of the standby database whose profile you want to remove from the broker configuration.

Usage Notes

- An error is returned if you specify the name of the primary database in the broker configuration.
- By default, the command removed the corresponding broker settings of the `LOG_ARCHIVE_DEST_n` initialization parameter on the primary database and the `LOG_ARCHIVE_CONFIG` initialization parameter on all databases in the configuration. To preserve these settings, use the `PRESERVE DESTINATIONS` option.
- This command cannot be executed if fast-start failover is enabled and *database-name* specifies the name of the target standby database.

Command Example

Example 1
The following example shows how to remove a database from the Data Guard broker configuration.

```
DGMGRL> SHOW CONFIGURATION;

Configuration - The SUPER cluster

  Protection Mode: MaxPerformance
  Databases:
    North_Sales  - Primary database
    South_Sales  - Physical standby database

Fast-Start Failover: DISABLED

Configuration status:
SUCCESS

DGMGRL> REMOVE DATABASE 'South_Sales';
Removed database "South_Sales" from the configuration.
```

```
Configuration - The SUPER cluster

  Protection Mode: MaxPerformance
  Databases:
    North_Sales  - Primary database

Fast-Start Failover: DISABLED

Configuration status:
SUCCESS
```

REMOVE INSTANCE

Removes an instance from an existing database profile in the broker configuration.

Format

REMOVE INSTANCE *instance-name*

[ON DATABASE *database-name*];

Command Parameters

instance-name
The name of the instance (SID) that you want to remove from the broker configuration.

database-name
The name of the database to which the `instance-name` is associated.

Usage Notes

- In an Oracle RAC database, the broker automatically adds started instances into the corresponding database profile. However, the broker may not automatically remove instances from the database profile. The `REMOVE INSTANCE` command can be used to manually remove any instance that no longer exists from the database profile.
- The *`instance-name`* can be unique across the configuration. If *`instance-name`* is not unique, you must specify both the *`database-name`* and the *`instance-name`* to fully identify the instance.
- This command is rejected for an instance that is currently active in the broker configuration.
- This command is rejected if this is the only instance currently associated with a database profile.

Command Example

Example 1
The following example shows how to remove an instance of the database.

```
DGMGRL> REMOVE INSTANCE 'south_sales3' ON DATABASE 'South_Sales';
Removed instance "south_sales3" from the database "South_Sales"
```

SHOW CONFIGURATION

Displays a summary and status of the broker configuration. The summary lists all databases included in the broker configuration and other information pertaining to the broker configuration itself, including the fast-start failover status.

Format

SHOW CONFIGURATION [VERBOSE | *property-name*];

Command Parameters

property-name
The name of the property for which you want to display summary information.

See Chapter 8, "Data Guard Broker Properties" for complete information about properties.

Usage Notes

- Use the `SHOW CONFIGURATION VERBOSE` command (or the `SHOW FAST_START FAILOVER` command) to show the properties related to fast-start failover.
- You can optionally specify either `VERBOSE` or `property-name`, but not both.

Command Examples

Example 1 Showing a Summary of the DRSolution Configuration

The following example provides a summary of the `DRSolution` configuration for which fast-start failover is disabled.

```
DGMGRL> SHOW CONFIGURATION;

Configuration - The SUPER cluster

  Protection Mode: MaxPerformance
  Databases:
    North_Sales  - Primary database
    South_Sales  - Physical standby database

Fast-Start Failover: DISABLED

Configuration status:
SUCCESS
```

Example 2 Showing Detailed Description of the DRSolution Configuration

The following example provides detailed information about the DRSolution configuration, including configuration properties, and fast-start failover-related information:

```
DGMGRL> SHOW CONFIGURATION VERBOSE;

Configuration - DRSolution

  Protection Mode: MaxAvailability
  Databases:
    North_Sales  - Primary database
```

```
    South_Sales  - (*) Physical standby database

  (*) Fast-Start Failover target

  Properties:
    FastStartFailoverThreshold      = '60'
    OperationTimeout                = '30'
    FastStartFailoverLagLimit       = '30'
    CommunicationTimeout            = '180'
    FastStartFailoverAutoReinstate  = 'TRUE'
    FastStartFailoverPmyShutdown    = 'TRUE'
    BystandersFollowRoleChange      = 'ALL'

Fast-Start Failover: ENABLED

  Threshold:        180 seconds
  Target:           South_Sales
  Observer:         observer.example.com
  Lag Limit:        30 seconds (not in use)
  Shutdown Primary: TRUE
  Auto-reinstate:   TRUE

Configuration Status:
SUCCESS
```

SHOW DATABASE

Displays information or property values of the specified database and its instances.

Format

SHOW DATABASE [VERBOSE] *database-name* [*property-name*];

Command Parameters

database-name
The name of the database for which you want to display information. The `VERBOSE` keyword, if used, must come before the *`database-name`* or an error is returned.

property-name
The name of the property for which you want to display a value. If a property name is specified, the output shows only the specified property (not all properties of the database), regardless of whether or not the `VERBOSE` keyword is specified.

> **See Also:** Chapter 4 and Chapter 8 for information about properties.

Usage Notes

- The `SHOW DATABASE` command shows a brief summary of the database. `SHOW DATABASE VERBOSE` shows properties of the database in addition to the brief summary. They both show the status of the database.
- The `SHOW DATABASE VERBOSE` command shows database-specific properties and instance-specific properties. For a non-Oracle RAC database, the values of the instance-specific properties are those of the only instance of the database. For an Oracle RAC database, the values of the instance-specific properties will not be shown, although the property names are still listed. To see the instance-specific values of these properties, use the `SHOW INSTANCE` command.
- The properties that the `SHOW DATABASE VERBOSE` command shows depend on the database role and the configuration composition:
  - For the primary database, properties specific to physical or snapshot standby databases are shown only if there is at least one physical or snapshot standby database in the configuration. The properties specific to logical standby databases are shown only if there is at least one logical standby database in the configuration.
  - For physical and snapshot standby databases, properties specific to logical standby databases are not shown.
  - For logical standby databases, properties specific to physical and snapshot standby databases are not shown.
- This command is rejected if you use the `SHOW DATABASE` *`database-name property-name`* command to show an instance-specific property in an Oracle RAC database.

Command Examples

Example 1

Shows database information in an abbreviated format.

```
DGMGRL> SHOW DATABASE 'South_Sales';

Database - South_Sales

  Role:            PHYSICAL STANDBY
  Intended State:  APPLY-ON
  Transport Lag:   0 seconds
  Apply Lag:       0 seconds
  Real Time Query: OFF
  Instance(s):
    south_sales1

Database Status:
SUCCESS
```

Example 2

Shows database information in an extended format.

```
DGMGRL> SHOW DATABASE VERBOSE 'South_Sales';

Database - South_Sales

  Role:            PHYSICAL STANDBY
  Intended State:  OFFLINE
  Transport Lag:   0
  Apply Lag:       0
  Real Time Query: OFF
  Instance(s):
    south_sales1

  Properties:
    DGConnectIdentifier             = 'South_Sales.example.com'
    ObserverConnectIdentifier       = ''
    LogXptMode                      = 'SYNC'
    DelayMins                       = '0'
    Binding                         = 'optional'
    MaxFailure                      = '0'
    MaxConnections                  = '1'
    ReopenSecs                      = '300'
    NetTimeout                      = '30'
    RedoCompression                 = 'DISABLE'
    LogShipping                     = 'ON'
    PreferredApplyInstance          = ''
    ApplyInstanceTimeout            = '0'
    ApplyParallel                   = 'AUTO'
    StandbyFileManagement           = 'AUTO'
    ArchiveLagTarget                = '0'
    LogArchiveMaxProcesses          = '5'
    LogArchiveMinSucceedDest        = '1'
    DbFileNameConvert               = 'dbs/t, dbs/bt'
    LogFileNameConvert              = 'dbs/t, dbs/bt'
    FastStartFailoverTarget         = 'North_Sales'
    InconsistentProperties          = '(monitor)'
    InconsistentLogXptProps         = '(monitor)'
    SendQEntries                    = '(monitor)'
```

```
    LogXptStatus                    = '(monitor)'
    RecvQEntries                    = '(monitor)'
    SidName                         = 'south_sales1'
    StaticConnectIdentifier         = '(DESCRIPTION=(ADDRESS=(PROTOCOL=tcp)
(HOST=south_sales1.example.com)(PORT=2840))
(CONNECT_DATA=(SERVICE_NAME=South_Sales_DGMGRL.example.com)
(INSTANCE_NAME=south_sales1)(SERVER=DEDICATED)))'
    StandbyArchiveLocation          = 'USE_DB_RECOVERY_FILE_DEST'
    AlternateLocation               = ''
    LogArchiveTrace                 = '255'
    LogArchiveFormat                = 'db2r_%d_%t_%s_%R.arc'
    LatestLog                       = '(monitor)'
    TopWaitEvents                   = '(monitor)'

Database Status:
SUCCESS
```

SHOW FAST_START FAILOVER

Displays all fast-start failover related information.

Format

SHOW FAST_START FAILOVER;

COMMAND PARAMETERS

None.

Usage Notes

The `SHOW FAST_START FAILOVER` command shows a summary of the fast-start failover configuration.

Command Example

```
DGMGRL> SHOW FAST_START FAILOVER;

Fast-Start Failover: DISABLED
 Threshold:           30 seconds
 Target:              (none)
 Observer:            (none)
 Lag Limit:           30 seconds
 Shutdown Primary:    TRUE
 Auto-reinstate:      TRUE

Configurable Failover Conditions
 Health Conditions:
   Corrupted Controlfile          YES
   Corrupted Dictionary           YES
   Inaccessible Logfile            NO
   Stuck Archiver                  NO
   Datafile Offline               YES

 Oracle Error Conditions:
   ORA-27102: out of memory
```

SHOW INSTANCE

Displays information or property values for the specified instance.

Format

SHOW INSTANCE [VERBOSE] *instance-name* [*property-name*] [ON DATABASE *database-name*];

Command Parameters

instance-name
The name of the instance for which you want to display information. The `VERBOSE` keyword, if used, must come before the instance name.

property-name
The name of the property for which you want to display a value. If a property name is specified, the output shows only the specified property (not all properties), regardless of whether or not the `VERBOSE` keyword is specified.

> **See Also:** Chapter 4 and Chapter 8 for information about properties.

database-name
The name of the database to which is associated the instance for which you want to show information.

Usage Notes

- The `SHOW INSTANCE` command shows a brief summary of the instance. `SHOW INSTANCE VERBOSE` shows properties of the instance in addition to the brief summary. They both show the status of the instance.
- The `SHOW INSTANCE VERBOSE` command only shows instance-specific properties.
- The properties that the `SHOW INSTANCE VERBOSE` command shows depend on the database role and the configuration composition:
  - For instances of the primary database, properties specific to physical or snapshot standby instances are shown only if there is at least one physical or snapshot standby database in the configuration. The properties specific to logical standby instances are shown only if there is at least one logical standby database in the configuration.
  - For instances of physical or snapshot standby databases, properties specific to logical standby instances are not shown.
  - For instances of logical standby databases, properties specific to physical and snapshot standby instances are not shown.
- The *`instance-name`* can be unique across the configuration. If *`instance-name`* is not unique, you must specify both the *`database-name`* and the `instance-name` to fully identify the instance.

Command Example

Example 1

The following example shows information about a specific instance of a database.

```
DGMGRL> SHOW INSTANCE north_sales1;

Instance 'north_sales1' of database 'North_Sales'

Instance Status:
SUCCESS
```

Example 2

Shows instance information in an extended format.

```
DGMGRL> SHOW INSTANCE VERBOSE north_sales1;

Instance 'north_sales1' of database 'North_Sales'

  Host Name: north.example.com
  PFILE:
  Properties:
    SidName                         = 'north_sales1'
    StaticConnectIdentifier         = '(DESCRIPTION=(ADDRESS=(PROTOCOL=tcp)
(HOST=north.example.com)(PORT=2094))
(CONNECT_DATA=(SERVICE_NAME=North_Sales_DGMGRL.example.com)
(INSTANCE_NAME=north_sales1)(SERVER=DEDICATED)))'
    StandbyArchiveLocation          = 'USE_DB_RECOVERY_FILE_DEST'
    AlternateLocation               = ''
    LogArchiveTrace                 = '255'
    LogArchiveFormat                = 'r_%d_%t_%s_%R.arc'
    LatestLog                       = '(monitor)'
    TopWaitEvents                   = '(monitor)'

Instance Status:
SUCCESS
```

SHUTDOWN

Shuts down a currently running Oracle instance.

Format

SHUTDOWN [ABORT | IMMEDIATE | NORMAL];

Command Parameters

None.

Usage Notes

- Using the `SHUTDOWN` command with no arguments is equivalent to using the `SHUTDOWN NORMAL` command.
- The following list describes the options to the `SHUTDOWN` command:
  - `ABORT`

    Proceeds with the fastest possible shutdown of the database without waiting for calls to complete or for users to disconnect from the database. Uncommitted transactions are not rolled back. Client SQL statements being processed are terminated. All users connected to the database are implicitly disconnected, and the next database startup will require instance recovery. You must use this option if a background process terminates abnormally.

    Caution: If you use the `ABORT` option on the primary database when fast-start failover is enabled and the observer is running, a fast-start failover may ensue. Use the `IMMEDIATE` or `NORMAL` option to prevent an unexpected fast-start failover from occurring.

  - `IMMEDIATE`

    Does not wait for current calls to complete or users to disconnect from the database. Further connections are prohibited. The database is closed and dismounted. The instance is shut down, and no instance recovery is required on the next database startup.

  - `NORMAL`

    This is the default option. The process waits for users to disconnect from the database. Further connections are prohibited. The database is closed and dismounted. The instance is shut down, and no instance recovery is required on the next database startup.

Command Example

Example 1

The following command shuts down the primary database in normal mode.

```
DGMGRL > SHUTDOWN;

Database closed.
Database dismounted.
Oracle instance shut down.
```

START OBSERVER

Starts the fast-start failover observer.

Format

START OBSERVER [FILE=*observer_configuration_filename*];

Command Parameters

observer_configuration_filename
Specifies an explicit directory path and file name on the observer computer.

Usage Notes

- The Oracle Client Administrator kit, or the full Oracle Database Enterprise Edition or Oracle Personal Edition kit must be installed on the observer computer to monitor a broker configuration for which fast-start failover is to be enabled. See Section 5.5.1 for more information.
- The `START OBSERVER` command must be issued on the observer computer. Once the observer is successfully started, control is not returned to the user until the observer is stopped (for example, by issuing the STOP OBSERVER command from a different client connection). If you want to perform further interaction with the broker configuration, you must connect through another client.
- The observer runs autonomously once it has been successfully started. For this reason, it is recommended that when invoking DGMGRL for the purpose of issuing the `START OBSERVER` command, specify the `-logfile` optional parameter on the command line so that output generated while acting as the observer is not lost. See Section 7.1.1 for more information about this parameter and see Section 9.5.3 for an example use of the `-logfile` option.
- If a directory path is not specified with the `FILE` parameter, the observer searches the current working directory for the `fsfo.dat` file. If an `fsfo.dat` file is not found and this is the first time the `START OBSERVER` command is issued, the observer creates a `fsfo.dat` file.
- The primary and target standby database `DB_UNIQUE_NAME` initialization parameter and connect identifiers are stored in the `fsfo.dat` configuration file. Oracle recommends you ensure this file is protected from unauthorized access.
- Fast-start failover does not need to be enabled before you issue this command.
  - If fast-start failover is enabled, the observer will retrieve primary and target standby connect identifiers from the broker configuration and begin monitoring the configuration.
  - If fast-start failover is not enabled, the observer continually monitors for when fast-start failover is enabled.
- Only the primary database needs to be running when you issue this command; the standby database that will be the target of a fast-start failover does not need to be running in order for this command to complete successfully.
- Use the `SHOW FAST_START FAILOVER` command, the `SHOW CONFIGURATION VERBOSE` command, or query the `FS_FAILOVER_*` columns in the `V$DATABASE` view on the primary database to see the status of the observer and its host computer.

- The `SHOW FAST_START FAILOVER` command indicates whether the broker configuration believes that an observer has already been started. If the command displays the following, then you can issue the `START OBSERVER` command on any computer to start the observer:

  ```
  Observer:       (none)
  ```

  If the `SHOW FAST_START FAILOVER` command shows a value for "Observer:", but the observer at that observer location is no longer running for some reason, you can do either of the following:

  – issue the `START OBSERVER` command on the same observer computer where it was started originally, with the observer configuration file used when the observer was first started

  – issue the `STOP OBSERVER` command and then the `START OBSERVER` command on any computer to start the observer

  If the `SHOW FAST_START FAILOVER` command shows a value for "Observer:" and the observer is already running at that location, an attempt to start an observer at that location again will fail with the following error:

  ```
  DGM-16954: Unable to open and lock the Observer configuration file
  ```

  If the `SHOW FAST_START FAILOVER` command shows a value for "Observer:" and you attempt to start an observer at a different location, the command will fail with the following error:

  ```
  ORA-16647: could not start more than one observer
  ```

- If the primary and target standby databases stay connected but they lose the connection to the observer, then the primary database goes into an unobserved state. This state is reported by the broker's health check capability.

Command Examples

Example 1

The following example shows how to start the observer.

```
DGMGRL> CONNECT sys@North_Sales.example.com;
Password: password
Connected.
DGMGRL> START OBSERVER;
Observer started
```

Example 2

The following example shows how to start the observer using `CONNECT '/'` so that connection credentials are not visible on the command line:

```
DGMGRL> CONNECT /@North_Sales.example.com;
DGMGRL> START OBSERVER;
Observer started.
```

You must set up Oracle Wallet or SSL to use `CONNECT '/'`. By setting up Oracle Wallet or SSL, you can write a script to securely start and run the observer as a background job without specifying database credentials in the script. When using Oracle Wallet as a secure external password store, be sure to add credentials for both the primary and fast-start failover target standby databases. The database connect

string that you specify when adding the credentials for each database must match the `ObserverConnectIdentifer` or `DGConnectIdentifier` database property.

> **See Also:** *Oracle Database Advanced Security Administrator's Guide* for more information about Oracle Wallet

STARTUP

Starts an Oracle database instance with any of the following options:

- `FORCE`: shuts down the current Oracle instance in the `SHUTDOWN ABORT` mode before restarting it.
- `RESTRICT`: allows only Oracle users with the `RESTRICTED SESSION` system privilege to connect to the instance.
- `PFILE`: specifies the `PFILE` initialization parameter file to be used when the database instance is started.
- `MOUNT`: mounts the specified database without opening it.
- `OPEN`: mounts and opens the specified database.
- `NOMOUNT`: starts the specified database instance without mounting the database.

Format

STARTUP

[FORCE]

[RESTRICT]

[PFILE=*filename*]

[MOUNT | OPEN [*open-options*] | NOMOUNT];

Command Parameters

filename
The name of the initialization parameter file to be used when starting the database instance. If you do not specify the `PFILE` parameter option, then the default server parameter file (specific to your operating system) is used.

open-options
The mode of access in which you want the specified database to start. The possible modes are:

```
READ ONLY
READ WRITE
```

Usage Notes

- Using the `STARTUP` command with no arguments is equivalent to using the `STARTUP OPEN` command.
- If you do not use the `FORCE` clause when you use the `STARTUP` command and the current database instance is running, an error results. The `FORCE` clause is useful when you are debugging or when error conditions are occurring. Otherwise, it should not be used.
- Use the `RESTRICT` clause to allow only Oracle users with the `RESTRICTED SESSION` system privilege to connect to the instance. Later, you can use the `ALTER SYSTEM` command through SQL*Plus to disable the restricted session feature.
- If you do not use the `PFILE` clause to specify the initialization parameter file, the `STARTUP` command uses the default server parameter file, if it exists. Otherwise,

the STARTUP command uses the default initialization parameter file. The default files are platform specific.

See your operating system-specific documentation for more information about the default parameter files.

- Use the OPEN clause to mount and open the specified database.
- The NOMOUNT clause starts the database instance without mounting the database. You cannot use the NOMOUNT clause with the MOUNT or OPEN options.

Command Examples

Example 1

The following examples show two different methods for starting a database instance. Each command starts a database instance using the standard parameter file, mounts the default database in exclusive mode, and opens the database.

```
DGMGRL> STARTUP;
DGMGRL> STARTUP OPEN;
```

Example 2

The following command shuts down the current instance, immediately restarts it without mounting or opening the database, and allows only users with restricted session privileges to connect to it.

```
DGMGRL > STARTUP FORCE RESTRICT NOMOUNT;
```

Example 3

The following command starts an instance using the parameter file testparm without mounting the database.

```
DGMGRL > STARTUP PFILE=testparm NOMOUNT;
```

Example 4

The following example starts and mounts a database instance, but does not open it.

```
DGMGRL> STARTUP MOUNT;
```

STOP OBSERVER

Stops the fast-start failover observer.

Format

STOP OBSERVER;

Command Parameters

None.

Usage Notes

- You can issue this command while connected to any database in the broker configuration.
- This command does not disable fast-start failover, but a fast-start failover cannot be initiated in the absence of an observer.
- Fast-start failover does not need to be enabled when you issue this command.
- If fast-start failover *is enabled* when you issue the `STOP OBSERVER` command, then the primary and standby databases must be connected and communicating with each other. Otherwise the following error is returned:

  ```
  ORA-16636 fast-start failover target standby in error state, cannot stop
  observer
  ```

  If connectivity does not exist between the primary and standby databases, you can issue the `DISABLE FAST_START FAILOVER FORCE` command on the primary database and then issue the `STOP OBSERVER` command. Note that disabling fast-start failover with the `FORCE` option on a primary database that is disconnected from the observer and the target standby database does not prevent the observer from initiating a fast-start failover to the target standby database.
- If fast-start failover *is not enabled* when you issue the `STOP OBSERVER` command, then only the primary database must be running when you stop the observer.
- The observer does not stop immediately when the `STOP OBSERVER` command is issued. The observer does not discover it has been stopped until the next time the observer contacts the broker.

  As soon as you have issued the `STOP OBSERVER` command, you may enter the `START OBSERVER` command again on any computer. You can start a new observer right away, even if the old observer has not yet discovered it was stopped. Any attempt to restart the old observer will fail, because a new observer has been started for the broker configuration.

Command Examples

Example 1

The following example stops the observer.

```
DGMGRL> STOP OBSERVER;
```

SWITCHOVER

A switchover operation is a planned transition in which the primary database exchanges roles with one of the standby databases. When you issue the `SWITCHOVER` command, the current primary database becomes a standby database, and the specified standby database becomes the primary database.

Format

SWITCHOVER TO *database-name*;

Command Parameter

database-name
The name of the standby database you want to change to the primary database role.

Usage Notes

- If fast-start failover is enabled, you may switch over only to the fast-start failover target standby database.
- The broker verifies that the primary and standby databases are in the following states before starting the switchover:
  - The primary database must be enabled and in the `TRANSPORT-ON` state so redo transport services are started.
  - The standby database must be enabled and in the `APPLY-ON` state, with log apply services started.
- The broker allows the switchover to proceed as long as there are no redo transport services errors for the standby database that you selected to participate in the switchover. However, errors occurring for any other bystander standby database will not prevent the switchover from proceeding.
- Switchover to a logical standby database is not allowed when the configuration is operating in maximum protection mode.
- If the broker configuration is operating in either maximum protection mode or maximum availability mode, the switchover maintains the protection mode even after the operation (described in Section 5.3.1). The switchover will not be allowed if the mode cannot be maintained because the target standby database of the switchover was the only standby that satisfied the protection mode requirement.
- If the standby database that is assuming the primary role is a physical standby database, then the old primary database will be restarted after the switchover completes. If the standby database is a logical standby database, then neither the primary database nor the logical standby database is restarted.
- If the standby database that is assuming the primary role is a physical standby database, then the original primary becomes a physical standby database.
- If the standby database that is assuming the primary role is a logical standby database, then the original primary becomes a logical standby database.
- If an Oracle RAC primary database is becoming a physical standby database, all but one instance of the primary database will be shut down before performing the switchover. See Section 5.3 for details.
- You cannot switchover to a snapshot standby database.

- If the standby database that is assuming the primary role is a logical standby database and there are physical standby databases in the configuration, after the switchover, the physical standby databases will be disabled.

> **Caution:** For this reason, Oracle generally recommends that you specify your physical standby database for switchover instead of your logical standby database. If you must switch over to your logical standby database, see Section 5.4.3 to re-create your physical standby database.
>
> If you intend to switch back to the original primary database relatively soon, you may allow the physical and snapshot standbys to remain disabled. Once you have completed the switchover back to the original primary, you may then reenable the physical and snapshot standby databases since they are still viable standbys for the original primary database.

Command Examples

Example 1

The following example shows a successful switchover in which the physical standby database, `South_Sales`, transitions into the primary role.

```
DGMGRL> switchover to 'South_Sales';
Performing switchover NOW, please wait...
New primary database "South_Sales" is opening...
Operation requires shutdown of instance "north_sales1" on database "North_Sales"
Shutting down instance "north_sales1"...
ORA-01109: database not open

Database dismounted.
ORACLE instance shut down.
Operation requires startup of instance "north_sales1" on database "North_Sales"
Starting instance "north_sales1"...
ORACLE instance started.
Database mounted.
Switchover succeeded, new primary is "South_Sales"
```

Example 2

If you connect to the database using operating system authentication, you can use any username and password to connect. However, DGMGRL may not be able to shut down and start up the primary and standby database automatically because it cannot remotely authenticate itself.

The following example shows a switchover that succeeded but returns an error because DGMGRL cannot shut down and start up the primary and standby databases.

```
DGMGRL> SWITCHOVER TO 'South_Sales';
Performing switchover NOW, please wait...
New primary database "South_Sales" is opening...
Operation requires shutdown of instance "north_sales1" on database "North_Sales"
Shutting down instance "north_sales1"...
ORA-01031: insufficient privileges

Warning: You are no longer connected to ORACLE.

Please complete the following steps to finish switchover:
```

```
shut down instance "north_sales1" of database "North_Sales"
start up and mount instance "north_sales1" of database "North_Sales"
```

Note: For DGMGRL to restart instances automatically, you must connect to the database using the same credentials given in the last `CONNECT` command, even if the last `CONNECT` command was used to connect to another database.

You must manually issue the SHUTDOWN and STARTUP commands to restart the new primary and any standby instances that may have been shut down.

8

Data Guard Broker Properties

This chapter describes the various configuration and database properties that help you view and control the behavior of entire broker configurations, individual databases, redo transport services, and log apply services.

This chapter discusses the following topics:

- Configuration Properties
- Monitorable (Read-Only) Database Properties
- Configurable Database Properties

Properties have either configuration-wide scope, database-wide scope, or instance-specific scope. Configuration-wide properties control the behavior of the broker on all databases in the configuration. The values of such properties apply uniformly across all databases in the configuration.

Database-wide properties allow you to view or control the behavior of a specific database. If the database (primary or standby) is an Oracle RAC database consisting of multiple instances, the value of such a property applies uniformly across all instances of that database.

Instance-specific properties allow you to view or control the behavior of an individual database instance. Such a property exists for all instances of an Oracle RAC database, but its value may differ from one specific instance to another.

Note: This chapter presents properties primarily from the point of view of the Data Guard command-line interface (DGMGRL). Using DGMGRL, the properties described in this chapter may be viewed or modified using discrete DGMGRL commands.

Enterprise Manager explicitly presents some of these properties on the Edit Properties page. Information from other properties may be implicitly incorporated into other Web pages displayed by Enterprise Manager. Each property's description in this chapter indicates how Enterprise Manager presents that property.

8.1 Configuration Properties

Configuration properties control the behavior of the broker configuration. You can view and dynamically update the values of these properties using either DGMGRL or Enterprise Manager. However, some properties can only be updated through DGMGRL.

A configuration property has configuration-wide scope; meaning that the value you set for the property applies uniformly to each database in the configuration.

The following sections describe the configuration properties:

- BystandersFollowRoleChange
- CommunicationTimeout
- FastStartFailoverAutoReinstate
- FastStartFailoverLagLimit
- FastStartFailoverPmyShutdown
- FastStartFailoverThreshold
- OperationTimeout

8.1.1 BystandersFollowRoleChange

The `BystandersFollowRoleChange` configuration property allows the user to decide whether the broker should determine whether bystander standby databases will be viable standby databases for the new primary database as part of performing a complete failover. Setting the property to `ALL` directs the broker to evaluate and detect each standby database that can be a viable standby database to the new primary database, as part of failover processing. Setting the property to `NONE` directs the broker to perform failover without evaluating standby database viability. This option decreases the processing time for failover, but disables broker management of all databases in the configuration. If fast-start failover is enabled, the observer will automatically reinstate the standby databases after failover has completed. Otherwise, you will have to manually reinstate the standby databases after failover has completed.

Category	Description
Datatype	String
Valid value	`ALL` or `NONE`
Broker default	`ALL`
Imported?	No
Parameter class	Not applicable
Role	Primary and standby
Standby type	Not applicable
Corresponds to	Not applicable
Scope	Broker configuration. This property will be consumed by broker on the database that is the target of a complete failover.
Enterprise Manager name	Not applicable

8.1.2 CommunicationTimeout

The `CommunicationTimeout` configuration property allows you to decide how many seconds the broker should wait before timing out its network communication between databases in the configuration. A value of zero indicates that a network communication should never be timed out.

Category	Description
Datatype	Integer
Valid values	>= 0
Broker default	180 seconds
Imported?	No
Parameter class	Not applicable
Role	Primary and standby
Standby type	Not applicable
Corresponds to	Not applicable
Scope	Broker configuration. This property will be consumed by broker on all databases in the configuration.
Enterprise manager name	Not applicable

8.1.3 FastStartFailoverAutoReinstate

The `FastStartFailoverAutoReinstate` configuration property causes the former primary database to be automatically reinstated if a fast-start failover was initiated because the primary database was either isolated or had crashed. To prevent automatic reinstatement of the former primary database in these cases, set this configuration property to `FALSE`.

The broker never automatically reinstates the former primary database if a fast-start failover was initiated because a user configuration condition was detected or was requested by an application calling the `DBMS_DG.INITIATE_FS_FAILOVER` function.

Category	Description
Datatype	Boolean
Valid value	`TRUE` or `FALSE`
Broker default	`TRUE`
Imported?	No
Parameter class	Not applicable
Role	Primary and standby
Standby type	Not applicable
Corresponds to	Not applicable
Scope	Broker configuration. This property will be consumed by the observer after fast-start failover has been enabled.
Enterprise Manager name	Automatically Reinstate Primary

8.1.4 FastStartFailoverLagLimit

The `FastStartFailoverLagLimit` configuration property establishes an acceptable limit, in seconds, that the standby is allowed to fall behind the primary in terms of redo applied, beyond which a fast-start failover will not be allowed. The lowest possible value is 10 seconds.

This property is used when fast-start failover is enabled and the configuration is operating in maximum performance mode.

Category	Description
Datatype	Integer
Valid value	Integral number of seconds. Must be greater than, or equal to, 10.
Broker default	30 seconds
Imported?	No
Parameter class	Not applicable
Role	Primary and standby
Standby type	Not applicable
Corresponds to	Not applicable
Scope	Broker configuration. This property will be consumed by the primary database after fast-start failover has been enabled.
Enterprise Manager name	Lag Limit

8.1.5 FastStartFailoverPmyShutdown

The `FastStartFailoverPmyShutdown` configuration property causes the primary database to shut down if fast-start failover is enabled and `V$DATABASE.FS_FAILOVER_STATUS` indicates the primary has been `STALLED` for longer than `FastStartFailoverThreshold` seconds. In such a situation, it is likely that the primary has been isolated and a fast-start failover has already occurred. A value of `TRUE` helps to ensure that an isolated primary database cannot satisfy user queries.

Setting this property to `FALSE` will not prevent the primary database from shutting down if a fast-start failover occurred because a user configuration condition was detected or was requested by an application by calling the `DBMS_DG.INITIATE_FS_FAILOVER` function.

Category	Description
Datatype	Boolean
Valid value	`TRUE` or `FALSE`
Broker default	`TRUE`
Imported?	No
Parameter class	Not applicable
Role	Primary and standby
Standby type	Not applicable
Corresponds to	Not applicable
Scope	Broker configuration. This property will be consumed by the primary database after fast-start failover has been enabled.
Enterprise Manager name	Automatically Shutdown Primary

8.1.6 FastStartFailoverThreshold

The `FastStartFailoverThreshold` configuration property defines the number of seconds the observer attempts to reconnect to the primary database before initiating a fast-start failover to the target standby database. The time interval starts when the observer first loses connection with the primary database. If the observer is unable to regain a connection to the primary database within the specified time, then the observer initiates a fast-start failover. See Step 4 in Section 5.5.2 for more information about setting this property.

The observer ignores the threshold completely if a configurable fast-start failover condition is detected or an application has requested that fast-start failover be initiated.

Category	Description
Datatype	Integer
Valid value	Integral number of seconds. Must be greater than, or equal to, 6.
Broker default	30 seconds
Imported?	No
Parameter class	Not applicable
Role	Target standby database that is about to fail over to the primary role
Standby type	Not applicable
Corresponds to	Not applicable
Scope	Broker configuration. This property will be consumed by the observer after fast-start failover has been enabled.
Enterprise Manager name	Oracle Enterprise Manager presents this as "Failover Threshold" on the Data Guard Overview page.

8.1.7 OperationTimeout

The `OperationTimeout` configuration property specifies the maximum amount of time the broker should wait for health check, get monitorable property, and set property operations to complete.

Category	Description
Datatype	Integer
Valid values	>= 30 and <= 600
Broker default	30 seconds
Imported?	No
Parameter class	Not applicable
Role	Primary and standby
Standby type	Not applicable
Corresponds to	Not applicable
Scope	Broker configuration. This property will be consumed by broker on all databases in the configuration.
Enterprise Manager name	Not applicable

8.2 Monitorable (Read-Only) Database Properties

Monitorable database properties allow you to view information related to the database or the instance, but you cannot change the values of these properties. You can view all of the monitorable properties using the DGMGRL `SHOW` commands.

> **Note:** Information for monitorable properties can be seen only when broker management of the database is enabled. Enterprise Manager displays the information obtained from these properties on the Property page.

If the database is an Oracle RAC database, the output values of some properties may also show instance-specific information. For example if the primary database is an Oracle RAC database, `LogXptStatus` may show `Instance1` transmitting redo data to `Standby2` has an error and `Instance2` transmitting redo data to `Standby4` has an error.

The following sections describe the monitorable database properties:

- InconsistentLogXptProps (Inconsistent Redo Transport Properties)
- InconsistentProperties (Inconsistent Database Properties)
- LogXptStatus (Redo Transport Status)
- LsbyFailedTxnInfo (Logical Standby Failed Transaction Information)
- LsbyParameters (Logical Standby Parameters)
- LsbySkipTable (Logical Standby Skip Table)
- LsbySkipTxnTable (SQL Apply Skip Transaction Table)
- RecvQEntries (Receive Queue Entries)
- SendQEntries (Send Queue Entries)
- TopWaitEvents

8.2.1 InconsistentLogXptProps (Inconsistent Redo Transport Properties)

The `InconsistentLogXptProps` monitorable database property returns a table that shows all properties related to redo transport services whose values are inconsistent between the broker configuration file and the runtime value in the database.

Although the properties reported in this table are database-specific properties, the inconsistency is reported on an instance-specific basis. A database-specific property only ensures that there is one value in the broker's configuration file for all instances sharing the database, but the runtime values among the instances can be different. This means that a database-specific property may be inconsistent only on some instances.

This property pertains to the primary database. The table contains the following columns:

- `INSTANCE_NAME`

  The value identifying the SID for the instance.

- `STANDBY_NAME`

  The database unique name (`DB_UNIQUE_NAME`) of the standby database to which this redo transport services property pertains.

- PROPERTY_NAME

  The name of the redo transport services property with an inconsistent value.

- MEMORY_VALUE

  The runtime value being used in the database.

- BROKER_VALUE

  The value of the redo transport services property saved in the broker configuration file.

8.2.2 InconsistentProperties (Inconsistent Database Properties)

The InconsistentProperties monitorable database property returns a table that shows all database properties whose values contained in the broker configuration file are inconsistent with the values in the corresponding server parameter file or the runtime values in the database.

The properties reported in this table can be either database-specific properties or instance-specific properties. A database-specific property only ensures that there is one value in the broker's configuration file for all instances sharing the database, but the runtime memory values or SPFILE values among the instances can be different. This means that a database-specific property may be inconsistent only on some instances.

Each individual database has this property. The table contains the following columns:

- INSTANCE_NAME

  The value identifying the SID for the instance.

- PROPERTY_NAME

  The name of the database property with the inconsistent value.

- MEMORY_VALUE

  The corresponding runtime value being used in the database.

- SPFILE_VALUE

  The corresponding value saved in the server parameter file (SPFILE).

- BROKER_VALUE

  The value of the database property saved in the broker configuration file.

8.2.3 LogXptStatus (Redo Transport Status)

The LogXptStatus monitorable database property returns a table that contains the error status of redo transport services for each of the enabled standby databases. This property pertains to the primary database.

The table contains the following columns:

- PRIMARY_INSTANCE_NAME

  The value identifying the SID for the instance on the primary database.

- STANDBY_DATABASE_NAME

  The database unique name (DB_UNIQUE_NAME) of the standby database.

- ERROR

The text of the redo transport error. If there is no error, the field is empty.

Each entry in the table indicates the status of redo transport services on one primary instance to one standby database.

The error status can be an empty string, which indicates there is no error.

In the following example, the `STATUS` from `South_Sales` is empty because there is no error for the `South_Sales` destination. The `South_Report` destination returned the `ORA-01034` message.

```
DGMGRL> SHOW DATABASE 'North_Sales' 'LogXptStatus' ;
LOG TRANSPORT STATUS
PRIMARY_INSTANCE_NAME STANDBY_DATABASE_NAME              STATUS
         north_sales1           South_Sales
         north_sales1          South_Report    ORA-01034: ORACLE not available
```

8.2.4 LsbyFailedTxnInfo (Logical Standby Failed Transaction Information)

The `LsbyFailedTxnInfo` monitorable database property identifies a failed transaction that caused log apply services to stop. This property contains a string with the following values from the `DBA_LOGSTDBY_EVENTS` view:

- `XIDUSN`: Transaction ID undo segment number
- `XIDSLT`: Transaction ID slot number
- `XIDSQN`: Transaction ID sequence number
- `STATUS_CODE`: Status (or Oracle error code) belonging to the `STATUS` message
- `STATUS`: Description of the current activity of the process or the reason why log apply services stopped

The transaction IDs and status information are separated by a string of number signs (###).

This property pertains to a logical standby database.

8.2.5 LsbyParameters (Logical Standby Parameters)

The `LsbyParameters` monitorable database property contains a string that identifies the value of `MAX_SGA` (maximum system global area) and `MAX_SERVERS` (maximum number of parallel query servers) specifically reserved for log apply services. These values are separated by a string of number signs (###) in the `LsbyParameters` property.

This property pertains to a logical standby database.

8.2.6 LsbySkipTable (Logical Standby Skip Table)

The `LsbySkipTable` monitorable database property lists the SQL Apply skip specifications. These skip specifications specify filters for SQL Apply to skip applying a certain class of online redo log files on the logical standby database. This property returns a table with the following columns from the `DBA_LOGSTDBY_SKIP` view:

- `ERROR`

  Indicates if the statement should be skipped (`Y`) or if errors should be returned for the statement (`N`)

- `STATEMENT_OPT`

  Indicates the type of statement that should be skipped

- SCHEMA

  The schema name for which this skip option should be used

- NAME

  Name of the object for which this skip option should be used

- PROCEDURE

  Name of the stored procedure to execute when processing the skip option

This property pertains to a logical standby database.

8.2.7 LsbySkipTxnTable (SQL Apply Skip Transaction Table)

The LsbySkipTxnTable monitorable database property lists the skip settings chosen. This property returns a table with following columns:

- XIDUSN: Transaction ID undo segment number
- XIDSLT: Transaction ID slot number
- XIDSQN: Transaction ID sequence number
- ACTIVE: Description of the current activity of the process or the reason why SQL Apply stopped

This property pertains to SQL Apply.

8.2.8 RecvQEntries (Receive Queue Entries)

The RecvQEntries monitorable database property returns a table indicating all log files that were received by the standby database but have not yet been applied. If no rows are returned, it implies all log files received have been applied. This property pertains to a standby database.

The table contains the following columns in the order shown:

- STATUS

  The STATUS column is set to one of the following values for a log file on a logical standby database:

  - NOT_APPLIED: No redo records in this log file have been applied.
  - PARTIALLY_APPLIED: Some of the redo records in this log file have been applied while others have not.
  - COMMITTED_TRANSACTIONS_APPLIED: This status value only applies to a logical standby database. All redo records belonging to the committed transactions have been applied. Redo records belonging to uncommitted transactions have not been read by LogMiner and may still be needed when the transactions are committed in the future. Therefore, it is not safe yet to discard this online redo log file.

- RESETLOGS_ID

  Resetlogs identifier associated with the archived redo log file

- THREAD

  The redo thread number

- LOG_SEQ

  The online redo log file sequence number

- TIME_GENERATED

  The first time when the online redo log file was written to the primary database

- TIME_COMPLETED

  The next time when the log file was archived on the primary database (corresponds to the NEXT_CHANGE# column)

- FIRST_CHANGE#

  First change number in the archived redo log file

- NEXT_CHANGE#

  First change in the next log file

- SIZE (KBs)

  The SIZE of the online redo log file in kilobytes

For example:

```
DGMGRL> SHOW DATABASE 'South_Sales' 'RecvQEntries' ;
              STATUS     RESETLOGS_ID           THREAD
LOG_SEQ          TIME_GENERATED       TIME_COMPLETED    FIRST_CHANGE#
NEXT_CHANGE#        SIZE (KBs)
         NOT_APPLIED        497198843                1                    5
06/20/2003 14:55:38  06/20/2003 16:31:26           202138
210718             7364
         NOT_APPLIED        497198843                1                    6
06/20/2003 16:31:26  06/20/2003 16:31:39           210718
210753               13
         NOT_APPLIED        497198843                1                    7
06/20/2003 16:31:39  06/20/2003 16:31:54           210753
210758                1
         NOT_APPLIED        497198843                1                    8
06/20/2003 16:31:54  06/20/2003 16:31:59           210758
210789               11
```

Note: Enterprise Manager displays this information on the Log File Details page.

8.2.9 SendQEntries (Send Queue Entries)

The SendQEntries monitorable database property returns a table that shows all log files on the primary database that were not successfully archived to one or more standby databases. This property pertains to the primary database.

The table contains the following columns:

- STANDBY_NAME

  The value can be empty or it can contain the database unique name (DB_UNIQUE_NAME) of a standby database. If empty, the STATUS column will contain a value of CURRENT or NOT_ARCHIVED.

- STATUS

  The STATUS column is set to one of the following values:

  – CURRENT: A log file to which online redo is currently being written.

  - NOT_ARCHIVED: A completed online redo log file that has not been archived locally.
  - ARCHIVED: A completed log file that has been archived locally but has not been transmitted to the standby database specified in the STANDBY_NAME column.

  The table contains exactly one row with the value of STATUS=CURRENT. There can be multiple rows with the value STATUS=ARCHIVED or STATUS=NOT_ARCHIVED.

- RESETLOGS_ID

  Resetlogs identifier associated with the archived redo log file

- THREAD

  The redo thread number.

- LOG_SEQ

  The log sequence number. Multiple rows may have the same LOG_SEQ value (for different STANDBY_NAME values).

- TIME_GENERATED

  The first time when the online redo log file was written to the primary database.

- TIME_COMPLETED

  The next time when the log file was archived on the primary database (corresponds to the NEXT_CHANGE# column).

- FIRST_CHANGE#

  First change number in the archived redo log file.

- NEXT_CHANGE#

  First change in the next log file.

- SIZE (KBs)

  The SIZE of the online redo log file in kilobytes.

For example, the following shows output from a SHOW DATABASE command:

```
DGMGRL> SHOW DATABASE 'North_Sales' 'SendQEntries' ;
PRIMARY_SEND_QUEUE
        STANDBY_NAME       STATUS     RESETLOGS_ID
THREAD              LOG_SEQ       TIME_GENERATED       TIME_COMPLETED
FIRST_CHANGE#     NEXT_CHANGE#       SIZE (KBs)
       South_Sales   ARCHIVED        497198843
1                    9  06/20/2003 16:31:59  06/20/2003 16:39:57
210789           211411              186
       South_Sales   ARCHIVED        497198843
1                   10  06/20/2003 16:39:57  06/20/2003 16:40:01
211411           211415                1
       South_Sales   ARCHIVED        497198843
1                   11  06/20/2003 16:40:01  06/20/2003 16:40:07
211415           211418                1
                         CURRENT        497198843
1                   12  06/20/2003 16:40:07
211418                                 1
```

Note: Enterprise Manager displays this information on the Log File Details page.

8.2.10 TopWaitEvents

The `TopWaitEvents` monitorable database property specifies the 5 events with the longest waiting time in the specified instance. The events and their waiting time are retrieved from `V$SYSTEM_EVENT`. Each instance in the configuration has this property. This property is an instance-specific monitorable property. The table contains the following columns in the order shown:

- Event

  The system wait event.

- Wait Time

  The total amount of time waited for this event in hundredths of a second.

The following example shows output from a `SHOW INSTANCE` command:

```
DGMGRL> SHOW INSTANCE north_sales1 'TopWaitEvents';
TOP SYSTEM WAIT EVENTS
               Event            Wait Time
   rdbms ipc message               671350
SQL*Net message from client         62390
          pmon timer                47897
  Queue Monitor Wait                43016
 wakeup time manager                38508
```

8.3 Configurable Database Properties

Configurable database properties control the behavior of databases in a broker configuration. You can view and dynamically update the values of these properties using either DGMGRL or Enterprise Manager. However, some properties can only be updated through DGMGRL.

In most cases, the configurable database property is said to have **database-wide scope**; meaning the value you set for the property applies uniformly to each instance of the database. However, in a few cases, the configurable database property is said to have **instance-specific scope**; meaning, for a multiple-instance database environment, it is possible that the values of some particular properties may differ from one instance of the database to the next. Table 8–1 lists each configurable database property and indicates if the scope of the property is database-wide or instance-specific. If the Scope column contains:

- Database—The value of the property is database wide, not instance or configuration specific.
- Instance—The value of the property is instance specific, not database or configuration specific.

  If there is an asterisk (*) present, it indicates that the property value can be set for all instances of an Oracle RAC database using the `EDIT INSTANCE * ON DATABASE` command.

- Configuration—The value of the property is configuration wide, not instance or database specific.

Table 8–1 Configurable Properties

Configurable Property Name	Scope	Pertains To
AlternateLocation	Instance	Redo transport services
ApplyInstanceTimeout	Database	Redo Apply and SQL Apply

Table 8–1 (Cont.) Configurable Properties

Configurable Property Name	Scope	Pertains To
ApplyParallel	Database	Redo Apply
ArchiveLagTarget	Database	Redo transport services
Binding	Database	Redo transport services
DbFileNameConvert	Database	Redo Apply
DelayMins	Database	Redo Apply and SQL Apply
DGConnectIdentifier	Database	Broker communication, Redo transport services
FastStartFailoverTarget	Database	Fast-start failover
LogArchiveFormat	Instance *	Redo transport services
LogArchiveMaxProcesses	Database	Redo transport services
LogArchiveMinSucceedDest	Database	Redo transport services
LogArchiveTrace	Instance *	Diagnosis
LogFileNameConvert	Database	Redo Apply
LogShipping	Database	Redo transport services
LogXptMode	Database	Redo transport services
LsbyASkipCfgPr	Database	SQL Apply
LsbyASkipErrorCfgPr	Database	SQL Apply
LsbyASkipTxnCfgPr	Database	SQL Apply
LsbyDSkipCfgPr	Database	SQL Apply
LsbyDSkipErrorCfgPr	Database	SQL Apply
LsbyDSkipTxnCfgPr	Database	SQL Apply
LsbyMaxEventsRecorded	Database	SQL Apply
LsbyMaxSga	Instance *	SQL Apply
LsbyMaxServers	Instance *	SQL Apply
LsbyPreserveCommitOrder	Database	SQL Apply
LsbyRecordAppliedDdl	Database	SQL Apply
LsbyRecordSkipDdl	Database	SQL Apply
LsbyRecordSkipErrors	Database	SQL Apply
MaxConnections	Database	Redo transport services
MaxFailure	Database	Redo transport services
NetTimeout	Database	Redo transport services
ObserverConnectIdentifier	Database	Fast-start failover
PreferredApplyInstance	Database	Redo Apply and SQL Apply
RedoCompression	Database	Redo transport services
ReopenSecs	Database	Redo transport services
SidName	Instance	Instance identification
StandbyArchiveLocation	Instance	Redo transport services

Table 8–1 (Cont.) Configurable Properties

Configurable Property Name	Scope	Pertains To
StandbyFileManagement	Database	Redo Apply and SQL Apply
StaticConnectIdentifier	Instance	Instance Startup

See Also: Chapter 4 for more information about database property management

Note: When a broker configuration with its primary database is created and standby databases are added to the configuration, the broker imports existing settings from the databases to set many of the properties. If importing an existing setting fails, or if a property value is not imported, then the broker uses a broker default value. The default values and whether or not a property is imported is indicated within each property description.

8.3.1 AlternateLocation

The `AlternateLocation` configurable database property specifies an alternate disk location to store the archived redo log files in the standby when the location specified by the `StandbyArchiveLocation` configurable database property fails. The property has instance-specific scope, and the location it specifies has to be accessible by the instance.

Category	Description
Datatype	String
Valid values	Directory specification on system where the standby instance is located
Broker default	Empty string
Imported?	No
Parameter class	Dynamic
Role	Standby[1]
Standby type	Physical, logical, or snapshot
Corresponds to	▪ On the standby instance, the `LOCATION` attribute for the `LOG_ARCHIVE_DEST_`*n* initialization parameter that represents an alternate destination of the local destination that matches the configurable database property `StandbyArchiveLocation` ▪ On the primary database, the `TEMPLATE` attribute for the `LOG_ARCHIVE_DEST_`*n* initialization parameter that represents an alternate destination
Scope	Instance
Enterprise Manager name	`Alternate Standby Location`

[1] Although this property is set for the standby instance, it is indirectly related to redo transport services for the primary database. The broker sets up both an alternate local destination on the standby instance and an alternate remote destination on the primary database.

Note: On a logical standby database, Oracle recommends the `LOCATION` attribute of the `LOG_ARCHIVE_DEST_n` initialization parameter for the local destination be different from the value of `AlternateLocation` configurable database property.

8.3.2 ApplyInstanceTimeout

The `ApplyInstanceTimeout` configurable database property specifies the number of seconds the broker waits after detecting the current apply instance failed before initiating the apply instance failover.

Category	Description
Datatype	Integer
Valid values	`>=0` (seconds)
Broker default	`0` (results in immediate apply instance failover)
Imported?	No
Parameter class	Not applicable
Role	Standby
Standby type	Physical or logical
Corresponds to	Not applicable
Scope	Database
Enterprise Manager name	Not applicable

8.3.3 ApplyParallel

The `ApplyParallel` configurable database property specifies whether Redo Apply should use multiple processes to apply redo data to the physical standby database. If Redo Apply is shut off, then setting the property has no immediate effect. However, when Redo Apply is running again, the value of the property is used to determine the parallel apply behavior of Redo Apply.

Category	Description
Datatype	String
Valid values	■ `AUTO`—the number of parallel processes used for Redo Apply is automatically determined by Oracle based on the number of CPUs that the system has. ■ `NO`--no parallel apply
Broker default	`AUTO`
Imported?	No
Parameter class	Not applicable
Role	Standby
Standby type	Physical
Corresponds to	■ `AUTO` corresponds to the `PARALLEL` clause of the `ALTER DATABASE RECOVER MANAGED STANDBY DATABASE` statement ■ `NO` corresponds to the `NOPARALLEL` clause of the `ALTER DATABASE RECOVER MANAGED STANDBY DATABASE` statement

Category	Description
Scope	Database
Enterprise Manager name	Not applicable

8.3.4 ArchiveLagTarget

The `ArchiveLagTarget` configurable database property limits the amount of data that can be lost and effectively increases the availability of the standby database by forcing a log switch after the amount of time you specify (in seconds) elapses. That way, the standby database will not miss redo records generated from a time range longer than the value set for the `ARCHIVE_LAG_TARGET` initialization parameter.

Category	Description
Datatype	Number
Valid values	Seconds (either 0 seconds, or any number from 60 to 7200 seconds)
Broker default	0 (disabled)
Imported?	Yes, from the `ARCHIVE_LAG_TARGET` initialization parameter
Parameter class	Dynamic
Role	Primary
Standby type	Not applicable
Corresponds to	`ARCHIVE_LAG_TARGET=`*`seconds`* initialization parameter
Scope	Database
Enterprise Manager name	`Archive Lag Target`

8.3.5 Binding

The `Binding` configurable database property specifies whether the standby destination is `MANDATORY` or `OPTIONAL`.

Category	Description
Datatype	String
Valid values	■ `MANDATORY` You can specify a policy for reuse of online redo log files using the `MANDATORY` value. If the archiving operation of a mandatory destination fails, online redo log files cannot be overwritten. ■ `OPTIONAL` You can specify a policy for reuse of online redo log files using the `OPTIONAL` value. If the archiving operation of an optional destination fails, the online redo log files are overwritten.
Broker default	`OPTIONAL`
Imported?	Yes, from the `BINDING` column of the `V$ARCHIVE_DEST` view of the primary database
Parameter class	Dynamic
Role	Standby[1]

Category	Description
Standby type	Physical, logical, or snapshot
Corresponds to	■ MANDATORY and OPTIONAL attributes for the LOG_ARCHIVE_DEST_*n* initialization parameter of the primary database ■ BINDING column of the V$ARCHIVE_DEST view of the primary database
Scope	Database
Enterprise Manager name	Not applicable

[1] Although this property is set for the standby database, it is indirectly related to the redo transport services for the primary database. The broker propagates the setting you specify on the standby database to the corresponding attributes of the LOG_ARCHIVE_DEST_*n* value of the primary database.

8.3.6 DbFileNameConvert

The DbFileNameConvert configurable database property distinguishes physical standby datafile filenames from primary datafile filenames. If you add a datafile to the primary database, this property converts the datafile name on the primary database to the datafile on the physical standby database.

This property is used in the following situations:

- At physical standby mount time, it is used to rename primary datafile filenames to standby datafile filenames if the datafile file path on the physical standby system is different from the primary database system.
- When a new data file is created on the primary database, a corresponding new data file will be created on the physical standby database if the StandbyFileManagement configurable database property is set to 'AUTO'. Oracle uses the data-file file-path mapping information from the DbFileNameConvert property to determine the standby file path of the new standby data file. If the StandbyFileManagement property is set to 'MANUAL', you must add a corresponding file to the physical standby database.

> **Note:** When a database is added to the configuration, the broker sets the initial value of this property to the in-memory value of the DB_FILE_NAME_CONVERT initialization parameter. It is possible that the in-memory value and server parameter file (SPFILE) value of this parameter will differ. If you want to use the parameter's in-memory value, then enable the database and the broker will ensure that the SPFILE value of the parameter is set to the in-memory value. If you want to use the SPFILE value, then set the property value to be the parameter's value stored in the SPFILE. Then enable the database.

Category	Description
Datatype	String

Category	Description
Valid values	Set the value of this property to a list of string pairs: 1. The first string is the substring found in the datafile names on the primary database. 2. The second string is the substring found in the datafile names on the standby database. For example, `('string1', 'string2', 'string3', 'string4',...)` Where: ■ `string1` is the substring of the primary database filename. ■ `string2` is the substring of the standby database filename. ■ `string3` is the substring of the primary database filename. ■ `string4` is the substring of the standby database filename.
Broker default	Empty string
Imported?	Yes, from the `DB_FILE_NAME_CONVERT` initialization parameter
Parameter class	Static
Role	Standby
Standby type	Physical
Corresponds to	`DB_FILE_NAME_CONVERT` initialization parameter
Scope	Database
Enterprise Manager name	`DB File Name Convert`

8.3.7 DelayMins

The `DelayMins` configurable database property specifies the number of minutes log apply services will delay applying the archived redo log data on the standby database. When the `DelayMins` property is set to the default value of 0 minutes, log apply services apply redo data as soon as possible.

If the `DelayMins` property is set to 0, start log apply services as follows:

- Start Redo Apply on physical standby databases using the following SQL statement:

  ```
  ALTER DATABASE RECOVER MANAGED STANDBY DATABASE USING CURRENT LOGFILE;
  ```

- Start SQL Apply on logical standby databases using the following SQL statement:

  ```
  ALTER DATABASE START LOGICAL STANDBY APPLY IMMEDIATE;
  ```

Category	Description
Datatype	Integer
Valid values	>=0 (minutes)
Broker default	`0`
Imported?	Yes, from the `DELAY_MINS` column of the `V$ARCHIVE_DEST` view of the primary database
Parameter class	Dynamic

Category	Description
Role	Standby[1]
Standby type	Physical and logical
Corresponds to	■ DELAY attribute for the LOG_ARCHIVE_DEST_*n* initialization parameter of the primary database ■ DELAY_MINS column of the V$ARCHIVE_DEST view of the primary database ■ Options used to start Redo Apply and SQL Apply
Scope	Database
Enterprise Manager name	Apply Delay (mins)

[1] Although this property is set for the standby database, it is indirectly related to the redo transport services for the primary database. The broker propagates the setting you specify on the standby database to the corresponding attributes of the LOG_ARCHIVE_DEST_*n* value of the primary database.

8.3.8 DGConnectIdentifier

The DGConnectIdentifier configurable database property specifies the connection identifier the broker uses when making connections to a database. If using DGMGRL, you supply the value when you enter the CREATE CONFIGURATION or ADD DATABASE command. If you are using Enterprise Manager, the value is supplied automatically. The connect identifier for a database must:

- Allow all other databases in the configuration to reach it.
- Allow the database to reach itself.
- Allow all instances of an Oracle RAC database to be reached.
- Specify a service that all instances dynamically register with the listeners so that connect-time failover on an Oracle RAC database is possible.
- Have failover attributes set to allow the primary database's Redo Transport Services to continue shipping redo data to an Oracle RAC standby database, even if the receiving instance of that standby database has failed.

The value of this property is specified in the SERVICE attribute of the LOG_ARCHIVE_DEST_*n* parameter when the broker configures redo transport services on the primary database.

Category	Description
Datatype	String
Valid values	A connect identifier that can be used to connect to this database
Broker default	Not applicable
Imported?	No
Parameter class	Not applicable
Role	Primary and standby
Standby type	Physical, logical, or snapshot
Corresponds to	SERVICE_NAME attribute of the LOG_ARCHIVE_DEST_*n* initialization parameter of the primary database
Scope	Database

Category	Description
Enterprise Manager name	Not applicable

Note: Prior to Oracle Database release 11.1, the `DGConnectIdentifier` configurable database property was known as the `InitialConnectIdentifier` property. When upgrading a 10*g* configuration to this release, the `InitialConnectIdentifier` value will be retained as the new `DGConnectIdentifier` value for that database.

If this is an Oracle RAC database, then before the upgrade, you must ensure that the `InitialConnectIdentifier` meets the criteria just listed for `DGConnectIdentifier`.

See Also: *Oracle Database Net Services Administrator's Guide*

8.3.9 FastStartFailoverTarget

The `FastStartFailoverTarget` configuration property specifies the `DB_UNIQUE_NAME` of the database that will be the target of a fast-start failover when this database is the primary database. See Step 2 in Section 5.5.2 for more information about setting this property.

Category	Description
Datatype	String
Valid value	`DB_UNIQUE_NAME` of the database that is the target of the fast-start failover.
Broker default	If only one physical or logical standby database exists, then the broker selects that as the default value for this property on the primary database when fast-start failover is enabled. If more than one physical or logical standby database exists, you must specify the `FastStartFailoverTarget` value explicitly, prior to enabling fast-start failover. The indicated target is verified when fast-start failover is enabled. For the target standby database, the broker automatically selects the current primary database as the value for this property when fast-start failover is enabled.
Imported?	No
Parameter class	Not applicable
Role	Primary or standby
Standby type	Physical or logical
Corresponds to	Not applicable
Scope	Database
Enterprise Manager name	Enterprise Manager displays the value for the current primary database on the Data Guard Overview page, along with whether or not fast-start failover has been enabled.

8.3.10 LogArchiveFormat

The `LogArchiveFormat` configurable instance-specific property specifies the format for filenames of archived redo log files using a database ID (`%d`), thread (`%t`), sequence number (`%s`), and resetlogs ID (`%r`).

Note: When a database is added to the configuration, the broker sets the initial value of this property to the in-memory value of the `LOG_ARCHIVE_FORMAT` initialization parameter. It is possible that the in-memory value and server parameter file (SPFILE) value of this parameter will differ. If you want to use the parameter's in-memory value, then enable the database and the broker will ensure that the SPFILE value of the parameter is set to the in-memory value. If you want to use the SPFILE value, then set the property value to be the parameter's value stored in the SPFILE. Then enable the database.

Category	Description
Datatype	String
Valid values	`%d_%t_%s_%r`
Broker default	Empty string
Imported?	Yes, from the `LOG_ARCHIVE_FORMAT` initialization parameter on the primary database
Parameter class	Static
Role	Primary and standby
Standby type	Physical, logical, or snapshot
Corresponds to	`LOG_ARCHIVE_FORMAT` initialization parameter
Scope	Instance (On an Oracle RAC database, you can use the `EDIT INSTANCE * ON DATABASE` command to have all instances use the same value for this property.)
Enterprise Manager name	Not applicable

8.3.11 LogArchiveMaxProcesses

The `LogArchiveMaxProcesses` configurable database property specifies the initial number of archiver processes (ARC*n*) the Oracle database invokes. The actual number of archiver processes in use may increase subsequently based on the archiving workload.

Category	Description
Datatype	Integer
Valid values	1 to 30
Broker default	`4`
Imported?	Yes, from the `LOG_ARCHIVE_MAX_PROCESSES` initialization parameter
Parameter class	Dynamic
Role	Primary and standby

Category	Description
Standby type	Physical, logical, or snapshot
Corresponds to	`LOG_ARCHIVE_MAX_PROCESSES` initialization parameter
Scope	Database
Enterprise Manager name	`Archiver Processes`

8.3.12 LogArchiveMinSucceedDest

The `LogArchiveMinSucceedDest` configurable database property controls when online redo log files are available for reuse. For the online redo log files to be available for reuse, archiving must succeed to a minimum number of destinations.

Category	Description
Datatype	Integer
Valid values	1 to 10
Broker default	1
Imported?	Yes, from the `LOG_ARCHIVE_MIN_SUCCEED_DEST` initialization parameter
Parameter class	Dynamic
Role	Primary
Standby type	Not applicable
Corresponds to	`LOG_ARCHIVE_MIN_SUCCEED_DEST` initialization parameter
Scope	Database
Enterprise Manager name	Not applicable

8.3.13 LogArchiveTrace

Set the `LogArchiveTrace` configurable instance-specific property to an integer value to see the progression of the archiving of online redo log files on the primary and the standby databases. The Oracle database writes an audit trail of the archived redo log files received from the primary database into process trace files.

Category	Description
Datatype	Integer

Category	Description
Valid values	A valid value is the sum of any combination of any of the following values: 0: Disable archive redo log tracing 1: Track archiving of online redo log file 2: Track archiving status of each archive redo log destination 4: Track archiving operational phase 8: Track `ARCHIVELOG` destination activity 16: Track detailed `ARCHIVELOG` destination activity 32: Track `ARCHIVELOG` destination parameter modifications 64: Track ARC`n` process state activity 128: Track FAL (fetch archive log) server related activities 256: Tracks RFS Logical Client 512: Tracks LGWR redo shipping network activity 1024: Tracks RFS physical client 2048: Tracks RFS/ARC*n* ping heartbeat 4096: Tracks real-time apply activity 8192: Tracks Redo Apply (media recovery or physical standby)
Broker default	255
Imported?	Yes, from the `LOG_ARCHIVE_TRACE` initialization parameter
Parameter class	Dynamic
Role	Primary and standby
Standby type	Physical, logical, or snapshot
Corresponds to	`LOG_ARCHIVE_TRACE` initialization parameter
Scope	Instance (On an Oracle RAC database, you can use the `EDIT INSTANCE * ON DATABASE` command to have all instances use the same value for this property.)
Enterprise Manager name	`Log Archive Trace`

8.3.14 LogFileNameConvert

The `LogFileNameConvert` configurable database property converts the filename of an online redo log file on the primary database to the filename of a corresponding online redo log file on the physical standby database.

> **Note:** When a database is added to the configuration, the broker sets the initial value of this property to the in-memory value of the `LOG_FILE_NAME_CONVERT` initialization parameter. It is possible that the in-memory value and server parameter file (SPFILE) value of this parameter will differ. If you want to use the parameter's in-memory value, then enable the database and the broker will ensure that the SPFILE value of the parameter is set to the in-memory value. If you want to use the SPFILE value, then set the property value to be the parameter's value stored in the SPFILE. Then enable the database.

Category	Description
Datatype	String
Valid values	Set the value of this property to a list of an even number of string pairs, separated by commas. 1. The first string is the substring found in the datafile names on the primary database. 2. The second string is the substring found in the datafile names on the standby database. For example, `('string1', 'string2', 'string3', 'string4',...)` Where: ■ `string1` is the substring of the primary database filename. ■ `string2` is the substring of the standby database filename. ■ `string3` is the substring of the primary database filename. ■ `string4` is the substring of the standby database filename.
Broker default	Empty string
Imported?	Yes, from the `LOG_FILE_NAME_CONVERT` initialization parameter
Parameter class	Static
Role	Standby
Standby type	Physical
Corresponds to	`LOG_FILE_NAME_CONVERT` initialization parameter
Scope	Database
Enterprise Manager name	`Log File Name Convert`

8.3.15 LogShipping

The `LogShipping` configurable database property specifies whether or not redo transport services can send redo data to the particular standby database. The broker uses the value of the `LogShipping` property only when the primary database is in the `TRANSPORT-ON` state:

- If the primary database is in the `TRANSPORT-OFF` state, then redo transport services to all standby databases are disabled, regardless of whether or not the `LogShipping` property is set to `ON` or `OFF`.
- If the primary database is in the `TRANSPORT-ON` state and the value of the `LogShipping` property is `ON`, then redo transport services are enabled to send redo data to the particular standby database. If the `LogShipping` property is `OFF`, then redo transport services are disabled to send redo data to the particular standby database.

Category	Description
Datatype	String
Valid values	`ON` or `OFF`
Broker default	`ON`
Imported?	No
Parameter class	Dynamic

Category	Description
Role	Standby[1]
Standby type	Physical, logical, or snapshot
Corresponds to	ENABLE and DEFER values for the LOG_ARCHIVE_DEST_STATE_*n* initialization parameter of the primary database
Scope	Database
Enterprise Manager name	Log Shipping

[1] Although this property is set for the standby database, it is indirectly related to the redo transport services for the primary database. The broker propagates the setting you specify on the standby database to the corresponding attributes of the LOG_ARCHIVE_DEST_n value of the primary database.

8.3.16 LogXptMode

The LogXptMode configurable database property enables you to set the redo transport service. You set the redo transport services on each standby database to one of the following modes:

- SYNC

  Configures redo transport services for this standby database using the SYNC and AFFIRM attributes of the LOG_ARCHIVE_DEST_*n* initialization parameter. Standby redo log files are required. This mode is required for the maximum protection or maximum availability data protection modes. This redo transport service enables the highest grade of data protection to the primary database, but also incurs the highest performance impact.

- ASYNC

  Configures redo transport services for this standby database using the ASYNC and NOAFFIRM attributes of the LOG_ARCHIVE_DEST_*n* initialization parameter. Standby redo log files are required. This mode enables a moderate grade of data protection to the primary database, and incurs a lower performance impact than SYNC.

Category	Description
Datatype	String
Valid values	SYNC or ASYNC
Broker default	ASYNC
Imported?	Yes, from the ARCHIVER, TRANSMIT_MODE, and AFFIRM columns of V$ARCHIVE_DEST view of the primary database
Parameter class	Dynamic
Role	Standby[1]
Standby type	Physical, logical, or snapshot
Corresponds to	▪ SYNC, ASYNC, AFFIRM, and NOAFFIRM attributes for the LOG_ARCHIVE_DEST_*n* initialization parameter of the primary database ▪ ARCHIVER, TRANSMIT_MODE, and AFFIRM columns of V$ARCHIVE_DEST view of the primary database
Scope	Database

Category	Description
Enterprise Manager name	`Redo Transport Service`

[1] Although this property is set for the standby database, it is indirectly related to the redo transport services for the primary database. The broker propagates the setting you specify on the standby database to the corresponding attributes of the `LOG_ARCHIVE_DEST_n` value of the primary database.

See Also: Chapter 4 for more information about setting data protection modes for redo transport services

8.3.17 LsbyASkipCfgPr

The `LsbyASkipCfgPr` configurable database property provides a way to add a skip specification to SQL Apply to control the apply service to skip (ignore) SQL statements that you do not want to apply to the logical standby database. The `SKIP` operation:

- Sets the criteria for identifying the SQL statements that will not be applied to the standby database
- Specifies any additional processing that will be done, if necessary

Specifying a value for this property has no effect and will be ignored if management of the standby database is disabled.

Category	Description
Datatype	String
Valid values	A valid set of arguments to the `DBMS_LOGSTDBY.SKIP` procedure
Broker default	Empty string
Imported?	No
Parameter class	Dynamic; SQL Apply does not require restart
Role	Standby
Standby type	Logical
Corresponds to	`DBMS_LOGSTDBY.SKIP` procedure
Scope	Database
Enterprise Manager name	`Add Skip Table Entries`

See Also: *Oracle Database PL/SQL Packages and Types Reference*

8.3.18 LsbyASkipErrorCfgPr

The `LsbyASkipErrorCfgPr` configurable database property adds a skip error specification to SQL Apply. It provides criteria to determine if an error should cause SQL Apply to stop. All errors to be skipped are stored in system tables that describe how exceptions should be handled.

Specifying a value for this property has no effect and will be ignored if management of the standby database is disabled.

Category	Description
Datatype	String

Category	Description
Valid values	A valid set of arguments to the `DBMS_LOGSTDBY.SKIP_ERROR` procedure. The string must contain comma separators between the arguments.
Broker default	Empty string
Imported?	No
Parameter class	Dynamic; SQL Apply does not require restart
Role	Standby
Standby type	Logical
Corresponds to	`DBMS_LOGSTDBY.SKIP_ERROR` procedure
Scope	Database
Enterprise Manager name	`Add Skip Table Entries`

See Also: *Oracle Database PL/SQL Packages and Types Reference*

8.3.19 LsbyASkipTxnCfgPr

The `LsbyASkipTxnCfgPr` configurable database property skips over a transaction that caused SQL Apply to stop applying transactions to the logical standby database. This property enables you to specify the transaction ID (`XIDSQN NUMBER`) of the problematic transaction that you want SQL Apply to ignore. Before you restart SQL Apply, you should issue a SQL transaction that will correctly update the logical standby database in place of the skipped transaction. Applying a compensating transaction will help keep the logical standby database transactionally consistent with the primary database.

Specifying a value for this property has no effect and will be ignored if management of the standby database is disabled.

Category	Description
Datatype	String
Valid values	A valid set of arguments to the `DBMS_LOGSTDBY.SKIP_TRANSACTION` procedure. Use comma separators between the arguments.
Broker default	Empty string
Imported?	No
Parameter class	Dynamic; SQL Apply does not require restart
Role	Standby
Standby type	Logical
Corresponds to	`DBMS_LOGSTDBY.SKIP_TRANSACTION` procedure
Scope	Database
Enterprise Manager name	`Skip Edit Properties`

Note: Enterprise Manager indirectly supports skipping a transaction using the Skip Edit Properties page.

See Also: *Oracle Database PL/SQL Packages and Types Reference*

8.3.20 LsbyDSkipCfgPr

The `LsbyDSkipCfgPr` configurable database property deletes an existing skip specification from SQL Apply. It reverses or removes the actions of the LsbyASkipCfgPr property by finding the record, matching all the parameters, and removing the record from the system table. The match must be exact, and multiple skip actions can be removed only by a matching number of unskip actions. You cannot remove multiple skip actions by using wildcard characters as a value to this property.

Specifying a value for this property has no effect and will be ignored if management of the standby database is disabled.

Category	Description
Datatype	String
Valid Values	A valid set of arguments to the `DBMS_LOGSTDBY.UNSKIP` procedure
Broker Default	Empty string
Imported?	No
Parameter Class	Dynamic; SQL Apply does not require restart
Role	Standby
Standby type	Logical
Corresponds to	`DBMS_LOGSTDBY.UNSKIP` procedure
Scope	Database
Enterprise Manager name	`Remove Skip Table Entries`

See Also: *Oracle Database PL/SQL Packages and Types Reference*

8.3.21 LsbyDSkipErrorCfgPr

The `LsbyDSkipErrorCfgPr` configurable database property deletes an existing skip error specification from SQL Apply. It reverses or removes the actions of the LsbyASkipErrorCfgPr property by finding the record, matching all of the parameters and removing the record from the system table. The match must be exact, and multiple skip actions can be removed only by a matching number of unskip actions. You cannot remove multiple skip actions by using wildcard characters as a value to this property.

Specifying a value for this property has no effect and will be ignored if management of the standby database is disabled.

Category	Description
Datatype	String

Category	Description
Valid values	A valid set of arguments to the `DBMS_LOGSTDBY.UNSKIP_ERROR` procedure. The string must contain comma separators between the arguments.
Broker default	Empty string
Imported?	No
Parameter class	Dynamic; SQL Apply does not require restart
Role	Standby
Standby type	Logical
Corresponds to	`DBMS_LOGSTDBY.UNSKIP_ERROR` procedure
Scope	Database
Enterprise Manager name	`Remove Skip Table Entries`

See Also: *Oracle Database PL/SQL Packages and Types Reference*

8.3.22 LsbyDSkipTxnCfgPr

The `LsbyDSkipTxnCfgPr` configurable database property reverses or removes the actions of the LsbyASkipTxnCfgPr property. The transaction IDs must match exactly, and multiple skip transaction actions can be removed only by a matching number of unskip transaction actions. You cannot remove multiple skip transaction actions by using wildcard characters as a value to this property.

Specifying a value for this property has no effect and will be ignored if management of the standby database is disabled.

Category	Description
Datatype	String
Valid values	A valid set of arguments to the `DBMS_LOGSTDBY.UNSKIP_TRANSACTION` procedure
Broker default	Empty string
Imported?	No
Parameter class	Dynamic; SQL Apply does not require restart
Role	Standby
Standby type	Logical
Corresponds to	`DBMS_LOGSTDBY.UNSKIP_TRANSACTION` procedure
Scope	Database
Enterprise Manager name	Not applicable

See Also: *Oracle Database PL/SQL Packages and Types Reference*

8.3.23 LsbyMaxEventsRecorded

The `LsbyMaxEventsRecorded` configurable database property specifies the number of events that will be stored in the `DBA_LOGSTDBY_EVENTS` table, which stores logical standby event information.

Category	Description
Datatype	Integer
Valid values	>=0
Broker default	0
Imported?	Yes, from the `MAX_EVENTS_RECORDED` row of `SYSTEM.LOGSTDBY$PARAMETERS`
Parameter class	Dynamic; SQL Apply does not require restart
Role	Standby
Standby type	Logical
Corresponds to	`DBMS_LOGSTDBY.APPLY_SET('MAX_EVENTS_RECORDED')` and the `DBMS_LOGSTDBY.APPLY_UNSET('MAX_EVENTS_RECORDED')` procedures
Scope	Database
Enterprise Manager name	`Max Events Recorded`

8.3.24 LsbyMaxSga

The `LsbyMaxSga` configurable instance-specific property specifies the number of megabytes for the allocation of SQL Apply cache in the system global area (SGA). If the value is 0, SQL Apply uses one quarter of the value set for the `SHARED_POOL_SIZE` initialization parameter.

Category	Description
Datatype	Integer
Valid values	>=0
Broker default	0
Imported?	Yes, from the `MAX_SGA` row of `SYSTEM.LOGSTDBY$PARAMETERS`
Parameter class	Dynamic; SQL Apply does not require restart
Role	Standby
Standby type	Logical
Corresponds to	`DBMS_LOGSTDBY.APPLY_SET('MAX_SGA')` and the `DBMS_LOGSTDBY.APPLY_UNSET('MAX_SGA')` procedures
Scope	Instance (On an Oracle RAC database, you can use the `EDIT INSTANCE * ON DATABASE` command to have all instances use the same value for this property.)
Enterprise Manager name	`Max SGA (MB)`

8.3.25 LsbyMaxServers

The `LsbyMaxServers` configurable instance-specific property specifies the number of parallel query servers specifically reserved for SQL Apply. If the value is 0, SQL Apply uses all available parallel query servers to read the log files and apply changes.

Category	Description
Datatype	Integer
Valid values	>=0
Broker default	0
Imported?	Yes, from the `MAX_SERVERS` row of `SYSTEM.LOGSTDBY$PARAMETERS`
Parameter class	Dynamic; SQL Apply does not require restart
Role	Standby
Standby type	Logical
Corresponds to	`DBMS_LOGSTDBY.APPLY_SET('MAX_SERVERS')` and the `DBMS_LOGSTDBY.APPLY_UNSET('MAX_SERVERS')` procedures
Scope	Instance (On an Oracle RAC database, you can use the `EDIT INSTANCE * ON DATABASE` command to have all instances use the same value for this property.)
Enterprise Manager name	`Max Servers`

8.3.26 LsbyPreserveCommitOrder

The `LsbyPreserveCommitOrder` configurable database property controls whether transactions are committed on the logical standby database in the exact same order in which they were committed on the primary database. Specify one of the following values:

- `TRUE`: Transactions are applied to the logical standby database in the exact order in which they were committed on the primary database.
- `FALSE`: Transactions containing non-overlapping sets of rows may be committed in a different order than they were committed on the primary database.

Category	Description
Datatype	String
Valid values	`TRUE` or `FALSE`
Broker default	`TRUE`
Imported?	Yes, from the `PRESERVE_COMMIT_ORDER` row of `SYSTEM.LOGSTDBY$PARAMETERS`
Parameter class	Static; SQL Apply requires restart
Role	Standby
Standby type	Logical
Corresponds to	`DBMS_LOGSTDBY.APPLY_SET('PRESERVE_COMMIT_ORDER')` and `DBMS_LOGSTDBY.APPLY_UNSET('PRESERVE_COMMIT_ORDER')` procedures
Scope	Database

Category	Description
Enterprise Manager name	`Preserve Commit Order`

8.3.27 LsbyRecordAppliedDdl

The `LsbyRecordAppliedDdl` configurable database property controls whether or not SQL statements that were applied to the logical standby database are recorded in the `DBA_LOGSTDBY_EVENTS` table. Specify one of the following values:

- `TRUE`: DDL statements applied to the logical standby database are recorded in the `DBA_LOGSTDBY_EVENTS` table. This is the default setting.
- `FALSE`: Applied DDL statements are not recorded.

Category	Description
Datatype	String
Valid values	`TRUE` or `FALSE`
Broker default	`TRUE`
Imported?	Yes, from the `RECORD_APPLIED_DDL` row of `SYSTEM.LOGSTDBY$PARAMETERS`
Parameter class	Dynamic; SQL Apply does not require restart
Role	Standby
Standby type	Logical
Corresponds to	`DBMS_LOGSTDBY.APPLY_SET('RECORD_APPLIED_DDL')` and the `DBMS_LOGSTDBY.APPLY_UNSET('RECORD_APPLIED_DDL')` procedures
Scope	Database
Enterprise Manager name	`Record Applied DDL`

8.3.28 LsbyRecordSkipDdl

The `LsbyRecordSkipDdl` configurable database property controls whether or not skipped DDL statements are recorded in the `DBA_LOGSTDBY_EVENTS` table. Specify one of the following values:

- `TRUE`: Skipped DDL statements are recorded in the `DBA_LOGSTDBY_EVENTS` table. This is the default setting.
- `FALSE`: Skipped DDL statements are not recorded in the `DBA_LOGSTDBY_EVENTS` table.

Category	Description
Datatype	String
Valid values	`TRUE` or `FALSE`
Broker default	`TRUE`
Imported?	Yes, from the `RECORD_SKIP_DDL` row of `SYSTEM.LOGSTDBY$PARAMETERS`
Parameter class	Dynamic; SQL Apply does not require restart

Category	Description
Role	Standby
Standby type	Logical
Corresponds to	`DBMS_LOGSTDBY.APPLY_SET('RECORD_SKIP_DDL')` and the `DBMS_LOGSTDBY.APPLY_UNSET('RECORD_SKIP_DDL')` procedures
Scope	Database
Enterprise Manager name	`Record Skip DDL`

8.3.29 LsbyRecordSkipErrors

The `LsbyRecordSkipErrors` configurable database property controls whether or not skipped errors (as described by the `DBMS_LOGSTDBY.SKIP_ERROR` procedure) are recorded in the `DBA_LOGSTDBY_EVENTS` table. Specify one of the following values:

- `TRUE`: Skipped errors are recorded in the `DBA_LOGSTDBY_EVENTS` table.
- `FALSE`: Skipped errors are not recorded in the `DBA_LOGSTDBY_EVENTS` table.

Category	Description
Datatype	String
Valid values	`TRUE` or `FALSE`
Broker default	`TRUE`
Imported?	Yes, from the `RECORD_SKIP_ERRORS` row of `SYSTEM.LOGSTDBY$PARAMETERS`
Parameter class	Dynamic; SQL Apply does not require restart
Role	Standby
Standby type	Logical
Corresponds to	`DBMS_LOGSTDBY.APPLY_SET('RECORD_SKIP_ERRORS')` and the `DBMS_LOGSTDBY.APPLY_UNSET('RECORD_SKIP_ERRORS')` procedures
Scope	Database
Enterprise Manager name	`Record Skip Errors`

8.3.30 MaxConnections

The `MaxConnections` configurable database property specifies how many ARC*n* processes will be used in parallel to transmit redo data from a single archived redo log on the primary database to the archived redo log at the remote site. If the `MaxConnections` property is set to a value greater than 1, redo transport services use multiple ARC*n* processes to transmit redo data to archived redo log files at the remote destinations.

Category	Description
Datatype	Integer
Valid values	1 to 20

Category	Description
Broker default	1
Imported?	Yes, from the `MAX_CONNECTIONS` column of the `V$ARCHIVE_DEST` view for the primary database.
Parameter class	Dynamic
Role	Standby
Standby type	Physical, logical, or snapshot
Corresponds to	■ `LOG_ARCHIVE_MAX_PROCESSES` initialization parameter[1] ■ `MAX_CONNECTIONS` attribute for the `LOG_ARCHIVE_DEST_`*n* initialization parameter of the primary database ■ `MAX_CONNECTIONS` column of the `V$ARCHIVE_DEST` view of the primary database
Scope	Database
Enterprise Manager name	Not applicable

[1] The `LOG_ARCHIVE_MAX_PROCESSES` initialization parameter affects the actual number of ARC*n* processes used by an instance.

8.3.31 MaxFailure

The `MaxFailure` configurable database property specifies the maximum number of contiguous archiving failures before the redo transport services stop trying to transport archived redo log files to the standby database. A value of zero indicates that an unlimited number of failures are allowed.

Category	Description
Datatype	Integer
Valid values	>=0
Broker default	0
Imported?	Yes, from the `MAX_FAILURE` column of `V$ARCHIVE_DEST` view of the primary database
Parameter class	Dynamic
Role	Standby[1]
Standby type	Physical, logical, or snapshot
Corresponds to	■ `MAX_FAILURE` attribute for the `LOG_ARCHIVE_DEST_`*n* initialization parameter of the primary database ■ `MAX_FAILURE` column of the `V$ARCHIVE_DEST` view of the primary database
Scope	Database
Enterprise Manager name	Not applicable

[1] Although this property is set for the standby database, it is indirectly related to the redo transport services for the primary database. The broker propagates the setting you specify on the standby database to the corresponding attributes of the `LOG_ARCHIVE_DEST_`*n* value of the primary database.

8.3.32 NetTimeout

The `NetTimeout` configurable database property specifies the number of seconds the LGWR waits for Oracle Net Services to respond to a LGWR request. It is used to bypass the long connection timeout in TCP.

Category	Description
Datatype	Integer
Valid values	0, 15 to 1200
Broker default	30
Imported?	Yes, from the `NET_TIMEOUT` column of `V$ARCHIVE_DEST` view of the primary database
Parameter class	Dynamic
Role	Primary and Standby
Standby type	Physical, logical, or snapshot
Corresponds to	▪ `NET_TIMEOUT` attribute of the `LOG_ARCHIVE_DEST_`*n* initialization parameter of the primary database ▪ `NET_TIMEOUT` column of `V$ARCHIVE_DEST` view of the primary database
Scope	Database
Enterprise Manager name	Not applicable

8.3.33 ObserverConnectIdentifier

The `ObserverConnectIdentifier` configurable database property specifies a connect identifier that can be used by the observer to connect to this database. This can pertain only to the primary database, or to the target standby database when fast-start failover is enabled.

Category	Description
Datatype	String
Valid Values	A connect identifier that observer can use to connect to this database
Broker Default	Empty String[1]
Imported?	No
Parameter Class	Not applicable
Role	Primary and Standby
Standby Type	Physical or logical
Corresponds to	Not applicable
Scope	Database
Enterprise Manager name	`Observer Connect Identifier`

[1] When this is Empty String (not set by the user), the connect identifier specified by this database's DGConnectIdentifier property will be used by the observer.

8.3.34 PreferredApplyInstance

The `PreferredApplyInstance` configurable database property indicates that a particular instance is the preferred choice for serving log apply services. It is only used when the database is a standby Oracle RAC database. The value could be an empty string (default) which means the broker chooses the apply instance.

Category	Description
Datatype	String
Valid Values	The instance name (SID) or empty string. Note that on certain platforms, SIDs may be case-sensitive.
Broker Default	Empty string
Imported?	No
Parameter Class	Not applicable
Role	Standby
Standby Type	Physical or logical
Corresponds to	Not applicable
Scope	Database
Enterprise Manager name	`Apply Instance`

See Also:

- *Oracle Database Administrator's Guide* for more information about SIDs
- Section 4.5.7 for information about apply services in an Oracle RAD environment

8.3.35 RedoCompression

The `RedoCompression` configurable database property is used to specify whether redo data is transmitted to a standby database in compressed or uncompressed form.

Note: Redo transport compression is a feature of the Oracle Advanced Compression option. You must purchase a license for this option before using the redo transport compression feature.

Category	Description
Datatype	String
Valid value	`DISABLE` or `ENABLE`
Broker Default	`DISABLE`
Imported?	Yes, from the `COMPRESSION` column of the `V$ARCHIVE_DEST` view of the primary database
Parameter class	Dynamic
Role	Standby[1]
Standby type	Physical, logical, or snapshot

Category	Description
Corresponds to	■ COMPRESSION attribute for the LOG_ARCHIVE_DEST_*n* initialization parameter of the primary database ■ COMPRESSION column of the V$ARCHIVE_DEST view of the primary database
Scope	Database
Enterprise Manager name	Not applicable

[1] Although this property is set for the standby database, it is indirectly related to the redo transport services for the primary database. The broker propagates the setting you specify on the standby database to the corresponding attributes of the LOG_ARCHIVE_DEST_*n* value of the primary database.

8.3.36 ReopenSecs

The ReopenSecs configurable database property specifies the minimum number of seconds before the archiver process (ARC*n*, foreground, or log writer process) should try again to access a previously failed destination.

Category	Description
Datatype	Integer
Valid values	>=0 seconds
Broker default	300
Imported?	Yes, from the REOPEN_SECS column of V$ARCHIVE_DEST view of the primary database
Parameter class	Dynamic
Role	Standby[1]
Standby type	Physical, logical, or snapshot
Corresponds to	■ REOPEN attribute for the LOG_ARCHIVE_DEST_*n* initialization parameter of the primary database ■ REOPEN_SECS column of the V$ARCHIVE_DEST view of the primary database
Scope	Database
Enterprise Manager name	Not applicable

[1] Although this property is set for the standby database, it is indirectly related to the redo transport services for the primary database. The broker propagates the setting you specify on the standby database to the corresponding attributes of the LOG_ARCHIVE_DEST_*n* value of the primary database.

8.3.37 SidName

The SidName configurable database property specifies the Oracle System Identifier (SID) of the instance. The property can only be updated when broker management of the database is disabled. You should only update the value when the SID is changed, in which case you need to disable broker management of the database, update the SidName property to match with the new SID, and reenable broker management of the database.

Note: If no existing instance object in the broker configuration, for the database object whose name matches this instance's `db_unique_name`, has a `SidName` property with a value that matches this instance's actual `SID`, then the broker will create a new instance object for this database that has this instance's `db_unique_name`. See Section 1.3, "Data Guard Broker Management Model" for more information.

Category	Description
Datatype	String
Valid values	SID of the instance. Note that on certain platforms, SIDs may be case-sensitive.
Broker default	Not applicable
Imported?	Yes
Parameter class	Not applicable
Role	Primary and standby
Standby type	Physical, logical, or snapshot
Corresponds to	`INSTANCE_NAME` column of the `V$INSTANCE` view
Scope	Instance
Enterprise Manager name	Not applicable

See Also: *Oracle Database Administrator's Guide* for more information about SIDs

8.3.38 StandbyArchiveLocation

The `StandbyArchiveLocation` configurable database property specifies the location of archived redo log files arriving from a primary database. Oracle recommends that you always explicitly set the value.

Category	Description
Datatype	String
Valid values	Nonempty file specification of the location of archived redo log files on the standby database. Use `DB_RECOVERY_FILE_DEST` if a database recovery area is desired.
Broker default	`dgsby_`*db_unique_name*
Imported?	Yes, from the `DESTINATION` column of the `V$ARCHIVE_DEST` fixed view of the standby database where the destination is a local destination and where the `VALID_FOR` attribute is compatible with the string `(STANDBY_ROLE, STANDBY_LOGFILE)`; if no such destination exists, import is from the `STANDBY_ARCHIVE_DEST` initialization parameter. Note that the `STANDBY_ARCHIVE_DEST` parameter has been deprecated and is supported for backward compatibility only.
Parameter class	Dynamic
Role	Standby

Category	Description
Standby type	Physical, logical, or snapshot
Corresponds to	■ LOCATION attribute of the LOG_ARCHIVE_DEST_*n* initialization parameter of the standby database with VALID_FOR compatible with (STANDBY_ROLE, STANDBY_LOGFILE) ■ DESTINATION column of the V$ARCHIVE_DEST view of the standby database
Scope	Instance
Enterprise Manager name	Standby Archive Location

Note: On a logical standby database, Oracle recommends the LOCATION attribute of the LOG_ARCHIVE_DEST_*n* initialization parameter for the local destination be different from the value of StandbyArchiveLocation property, unless you are using a database recovery area.

8.3.39 StandbyFileManagement

The StandbyFileManagement configurable database property affects how the add datafile operation on the primary database is applied on the standby database. If this property is set to AUTO, in conjunction with valid settings in the DbFileNameConvert configurable database property, a corresponding new datafile is automatically created on the standby database. The location of this new standby datafile is determined by the value of the DbFileNameConvert property.

If this property is set to MANUAL, you have to create the correct new datafile on the standby database manually.

Category	Description
Datatype	String
Valid values	AUTO or MANUAL
Broker default	AUTO
Imported?	Yes, from the STANDBY_FILE_MANAGEMENT initialization parameter
Parameter class	Dynamic
Role	Standby
Standby type	Physical, logical, or snapshot
Corresponds to	STANDBY_FILE_MANAGEMENT initialization parameter
Scope	Database
Enterprise Manager name	Not applicable

8.3.40 StaticConnectIdentifier

The StaticConnectIdentifier configurable instance-specific property specifies the connection identifier that the DGMGRL client will use when starting database instances.

Category	Description
Datatype	String
Valid values	A connect identifier that refers to a service that is statically registered.
Broker default	Connect descriptor that is the concatenation of:[1] ■ The `ADDRESS` attribute value of the listener that is specified for the `LOCAL_LISTENER` initialization parameter ■ The value for the `SERVICE_NAME` attribute will be set to a concatenation of `db_unique_name_DGMGRL.db_domain`
Imported?	Yes, from the `LOCAL_LISTENER` and `DB_UNIQUE_NAME` initialization parameters.
Parameter class	Not applicable
Role	Primary and standby
Standby type	Physical, logical, or snapshot
Corresponds to	Not applicable
Scope	Instance
Enterprise Manager name	Not applicable

[1]If the instance specified by the `SidName` property is started on a different host (read from the `HOST_NAME` column of the `V$INSTANCE` view) than the host on which it had been previously started, the broker automatically updates the default value of the `StaticConnectIdentifier` property to incorporate the current `ADDRESS` attribute of the listener that is specified for the `LOCAL_LISTENER` initialization parameter.

See Also: *Oracle Database Net Services Administrator's Guide* for more information about statically registered services

9

Troubleshooting Data Guard

This chapter describes various errors and how to solve them. It contains the following topics:

- Sources of Diagnostic Information
- General Problems and Solutions
- Troubleshooting Problems During a Switchover Operation
- Troubleshooting Problems During a Failover Operation
- Troubleshooting Problems with the Observer

9.1 Sources of Diagnostic Information

The Data Guard broker provides information about its activities in several forms:

- Database status information (see Section 4.9)
- Oracle alert log files

  The broker records key information in the alert log file for each instance of each database in a broker configuration. You can check the alert log files for such information when troubleshooting Data Guard.
- Data Guard "broker log files"

  For each instance of each database in a broker configuration, the broker DMON process records important behavior and status information in a "broker log file," useful in diagnosing Data Guard failures.

  The broker log file is created in the same directory as the alert log and is named `drc<$ORACLE_SID>.log`.

9.2 General Problems and Solutions

This section describes general problems and solutions. This section contains the following topics:

- ORA-16596: database not part of the Data Guard broker configuration
- Redo Accumulating on the Primary Is Not Sent to Some Standby Databases
- Many Log Files Are Received on a Standby Database But Not Applied
- The Primary Database is Flashed Back

9.2.1 ORA-16596: database not part of the Data Guard broker configuration

A request was issued to the broker, but the database instance through which you have connected is no longer a part of the broker configuration. You may see this error when the broker fails to locate a broker configuration profile for the database upon which it is running.

Solution Reconnect to the configuration through another database that you know is part of the broker configuration. Confirm that a database exists in the broker configuration that has a name that matches the `db_unique_name` value of the database that returned the ORA-16596 error.

This problem can also occur if you attempt to enable a configuration, but the broker configuration file for one of its databases was accidentally removed or is outdated. In this case, remove the database from the broker configuration, manually delete the configuration file for that standby database (not for the primary database), and try again to enable the configuration. After the configuration is enabled, to create a new database profile for the previously deleted standby database, you can either use the Enterprise Manager Add Standby Database wizard and choose the Add existing standby database option, or you can use the DGMGRL command-line interface and issue the `ADD DATABASE` command.

9.2.2 Redo Accumulating on the Primary Is Not Sent to Some Standby Databases

By viewing the Log File Details page in Enterprise Manager, you have determined that log files are accumulating on the primary database and are not being archived to some of the standby databases in the broker configuration.

Solution To narrow down the problem, do the following:

- Verify that the state of the primary database is in the `TRANSPORT-ON` state (not `TRANSPORT-OFF`).
- Verify that the value of the `LogShipping` database property of the standby database in question is `ON`.
- Check the status of the redo transport services on the primary database using the `LogXptStatus` monitorable database property. If redo transport services have an error, then use the error message to determine further checking and resolution action. For example:
  - If the error indicates the standby database is not available, you need to restart the standby database.
  - If the error indicates no listener, you need to restart the listener.
  - If the error indicates the standby database has no local destination, you need to set up a standby location to store archived redo log files from the primary database.

9.2.3 Many Log Files Are Received on a Standby Database But Not Applied

By viewing the Performance page or Log File Details page in Enterprise Manager, you have determined that the standby database accumulates too many log files without applying them.

Solution There are many possible reasons why archived redo log files might not be applied to the standby database. Investigate why the log files are building up and rule out the valid reasons.

If the current status of the standby database is not normal:

- Determine whether or not the log apply services might be unexpectedly stopped. See the ORA-16766 (for physical standby databases) or ORA-16768 (for logical standby databases) error description and solution statement for more help.
- If this is a logical standby database, check to see if a failed transaction has occurred.
- If you want to suppress the error while you investigate the problem, you can temporarily disable broker management of the database.

  See Also: Chapter 7 for additional information about disabling the database using the DGMGRL command-line interface

If the current status of the standby database is normal:

- Verify the state of the standby database is `APPLY-ON` (not in the `APPLY-OFF` state).
- Verify the state of the primary database is `TRANSPORT-ON` (not in the `TRANSPORT-OFF` state).

  See Also: Chapter 8 for additional information about the `LogShipping` database property

- Check to see if log files are building up because the value of the `DelayMins` property is set too large. (Log apply services will delay applying the archived redo log files on the standby database for the number of minutes specified.)

  See Also: Chapter 8 for additional information about the `DelayMins` database property

- If you cannot see any errors, compare the archive rate to the apply rate on the Performance page in Enterprise Manager to see if the apply rate is lower than the archive rate.

9.2.4 The Request Timed Out or Enterprise Manager Performance Is Sluggish

If the broker requests are not completing within the normal timeout parameters, try the following actions to solve the problem:

1. Verify the network is operating appropriately.
2. Try to ping all of the nodes in the configuration.
3. Try reconnecting through another database to retry the operation.
4. Run the `VERIFY` command to determine on which database the broker is unable to process the requests.

9.2.5 The Primary Database is Flashed Back

If the primary database is flashed back, the standby databases in the configuration must be also be flashed back or re-created to be viable targets for switchovers or failovers. The broker will report errors for the standby databases if the primary database has been flashed back.

For more information about restoring the viability of a standby database that was disabled by the broker, see Section 5.4.3.

9.3 Troubleshooting Problems During a Switchover Operation

If the switchover fails due to problems with the configuration, the broker reports any problems it encounters in the alert log files or in the broker log files (see Section 9.1). In general, you can choose another database for the switchover or restore the configuration to its pre-switchover state and then retry the switchover. The following subsections describe how to recover from the most common problems.

If fast-start failover is enabled, the broker does not allow switchover to any standby database except to the target standby database. In addition, switchover to the target standby database is allowed only when the value of the `FS_FAILOVER_STATUS` column in the `V$DATABASE` view on the target standby database is either `READY` or `SUSPENDED`.

> **See Also:** Section 5.5.2.1, "When Fast-Start Failover Is Enabled and the Observer Is Running"

9.3.1 Failed Switchovers to Physical Standby Databases

Examine the alert and DRC log files on the original primary and the target standby databases to determine the cause of the failure. The following sections describe the steps necessary to recover from a failed switchover to a physical standby, based on the types of errors contained in the log files:

- Failure to Convert the Original Primary Database
- Failure to Convert Target Physical Standby Database
- Failure to Open New Primary Database

9.3.1.1 Failure to Convert the Original Primary Database

If the broker switchover failed and the `DATABASE_ROLE` column of the `V$DATABASE` view contains a value of `PRIMARY`, take the following steps:

1. Disable fast-start failover if it is enabled.
2. If the old primary database has been closed, open it.
3. Correct the errors reported in the alert and DRC log files.
4. Retry the broker switchover.
5. Reenable fast-start failover if it was disabled in Step 1.

If the `DATABASE_ROLE` column of `V$DATABASE` contains a value of `PHYSICAL STANDBY`, then you can perform either one of the following procedures:

1. Disable fast-start failover if it is enabled.
2. Connect to the new physical standby database (original primary database) and disable the broker configuration.
3. Restart the new physical standby database.
4. Use the `ALTER DATABASE COMMIT TO SWITCHOVER TO PRIMARY DATABASE` SQL statement to convert the new physical standby database back into a primary database.
5. Open the new primary database.
6. Reenable the broker configuration.
7. Reenable fast-start failover if it was disabled in step 1.

8. Reattempt the broker switchover.

OR

1. Disable fast-start failover if it is enabled.
2. Connect to the new physical standby database (original primary database) and remove the broker configuration.
3. Connect to target standby database.
4. Use the `ALTER DATABASE COMMIT TO SWITCHOVER TO PRIMARY DATABASE` SQL statement to complete the switchover to the target physical standby.
5. Open the new primary database.
6. Shut down and restart the new physical standby database.
7. Connect to the new primary database and re-create the broker configuration.
8. Enable the broker configuration.
9. Reenable fast-start failover if it was disabled in step 1.

9.3.1.2 Failure to Convert Target Physical Standby Database

If the broker switchover failed and the `DATABASE_ROLE` column of the `V$DATABASE` view on the target physical standby database contains a value of `PHYSICAL STANDBY`, take the following steps:

1. Disable fast-start failover if it is enabled.
2. Check the alert and DRC log files to see what caused the switchover to fail and correct it. Once the problem has been corrected you can perform either one of the following procedures:
   a. Connect to the new physical standby database and disable the configuration.
   b. Shut down and restart the new physical standby.
   c. Use the `ALTER DATABASE COMMIT TO SWITCHOVER TO PRIMARY DATABASE` SQL statement to convert the new physical standby database back into a primary database.
   d. Reenable the configuration.
   e. Reattempt the switchover.

   OR

   a. Connect to the new physical standby database (original primary database) and remove the broker configuration.
   b. Use the `ALTER DATABASE COMMIT TO SWITCHOVER TO PRIMARY DATABASE` SQL statement to complete the switchover to the target physical standby database. Open the new primary database.
   c. Shut down and restart the new physical standby database.
   d. Connect to the new primary database and re-create the broker configuration.
   e. Enable the broker configuration.
3. Reenable fast-start failover if it was disabled in Step 1.

9.3.1.3 Failure to Open New Primary Database

If the broker switchover failed because the new primary database could not be opened, follow these steps:

1. Disable fast-start failover if it is enabled.
2. Connect to the new physical standby database (original primary database) and remove the broker configuration.
3. Check the new primary database's alert log file to see what prevented the database from opening and correct it, and then open the database.
4. Shut down and restart the new physical standby database.
5. Connect to the new primary database and re-create the broker configuration.
6. Enable the broker configuration.
7. Reenable fast-start failover if it was disabled in Step 1.

9.3.2 Failed Switchovers to Logical Standby Databases

Examine the alert and DRC log files on the original primary and the target standby databases to determine the cause of the failure. The following sections describe the steps necessary to recover from a failed switchover to a logical standby, based on the types of errors contained in the log files:

- Failure to Convert Original Primary Database
- Failure to Convert Target Logical Standby Database

9.3.2.1 Failure to Convert Original Primary Database

If the broker switchover failed because there was an error converting the primary database, take the following steps:

1. Disable fast-start failover if it is enabled.
2. Disable the broker configuration.
3. Take the corrective actions described in *Oracle Data Guard Concepts and Administration*.

   If after taking corrective action, you have:

   - Restored the original primary database to the primary role, take the following steps:
     a. Reenable the broker configuration.
     b. Retry the broker switchover.
   - Manually switched over the target logical standby to a primary database, take the following steps:
     a. Connect to the original primary database and remove the broker configuration.
     b. Connect to the target logical standby database and convert it to a primary database using the `ALTER DATABASE COMMIT TO SWITCHOVER TO PRIMARY` SQL statement.
     c. Connect to the new primary database and re-create the broker configuration.
     d. Enable the broker configuration.

4. Enable fast-start failover if it was disabled in step 1.

9.3.2.2 Failure to Convert Target Logical Standby Database

If the broker switchover failed and the `DATABASE_ROLE` column of the `V$DATABASE` view contains a value of `PRIMARY`, or if the column contains a value of `LOGICAL STANDBY` and you intend to complete the switchover, follow these steps:

1. Disable fast-start failover if it is enabled.
2. Connect to the target logical standby database and disable the broker configuration.
3. Take the corrective actions described in *Oracle Data Guard Concepts and Administration*.
4. Reenable the broker configuration.
5. Enable fast-start failover if it was disabled in step 1.

9.3.3 Additional Problems That May Occur During a Switchover Operation

Problem: The broker switchover fails due to problems with redo transport services.

Solution: Verify the state and status of the primary and standby database by viewing its information on the Enterprise Manager Data Guard Overview page or through the DGMGRL client `SHOW DATABASE` commands.

If using Enterprise Manager, then run the Verify operation after the switchover completes to examine the alert log file of the new primary database and to verify the status of the configuration.

Problem: The switchover may fail during verification checks done by Data Guard broker (for example, redo transport services might return errors on a database that is involved in the switchover).

Solution: Choose another database for the switchover or fix the problem by transporting the archived redo log files.

9.4 Troubleshooting Problems During a Failover Operation

Although it is possible for a failover to stop, it is unlikely. If an error occurs, it is likely to happen when the standby database is transitioning to the primary role. Use these guidelines to fix the problem and continue the broker failover.

9.4.1 Failed Failovers to Physical Standby Databases

Use the steps below to recover from a failed broker failover to a physical standby database.

9.4.1.1 Failed Broker Complete Physical Failovers

Examine the alert and DRC log files on the target standby database to determine the cause of the failure and correct the problem. If the `ALTER DATABASE RECOVER MANAGED STANDBY DATABASE FINISH` SQL statement returned an error, or if the statement completes successfully but the database could not be converted to a primary database, follow these steps:

1. Connect to the target standby database and disable fast-start failover using the `FORCE` option if it is enabled.
2. Then you can either:
   - Connect to another physical standby database and attempt a broker complete failover.
   - Perform a broker immediate failover to the target physical standby database.
3. Reinstate the original primary database and any bystander physical standby databases that are disabled with a status of reinstatement required (`ORA-16661`).
4. Reenable fast-start failover if it was disabled in step 1.

9.4.1.2 Failed Broker Immediate Physical Failovers

Examine the alert and DRC log files on the target standby database to determine the cause of the failure and correct the problem. If the problem can be corrected, retry the broker immediate failover. Otherwise connect to another physical standby database and attempt either a broker complete or immediate failover.

9.4.2 Failed Failovers to Logical Standby Databases

1. Examine the alert and DRC log files on the target standby database to determine the cause of the failure and correct the problem.
2. Connect to the target standby database and disable fast-start failover using the `FORCE` option if it is enabled.
3. Retry the broker failover.
4. Reinstate the old primary database. All bystander standby databases will be re-created from a copy of the new primary database.
5. Reenable fast-start failover if it was disabled in step 1.

If broker failover continues to fail, you should stop the broker on all databases in the Data Guard configuration (set the `DG_BROKER_START` initialization parameter to `FALSE`). Remove the Data Guard broker configuration files from all databases. Attempt a manual failover using the guidelines for role transitions in *Oracle Data Guard Concepts and Administration*.

Note: You can enable or disable the broker configuration using DGMGRL `ENABLE CONFIGURATION` and `DISABLE CONFIGURATION` commands. You cannot disable the configuration using the Enterprise Manager. You can only enable the configuration using Enterprise Manager if it was previously disabled using DGMGRL.

9.5 Troubleshooting Problems with the Observer

The observer continuously monitors the fast-start failover environment to ensure the primary database is available. Installing and starting the observer is an integral part of using fast-start failover. The following sections describe techniques for troubleshooting the observer:

- Problems Starting the Observer
- Problems Because the Observer Has Stopped

- Capturing Observer Actions in the Observer Log File

9.5.1 Problems Starting the Observer

Only one observer can be observing the broker configuration at any given time. If you attempt to start a second observer, one of the following errors is returned:

```
ORA-16647: could not start more than one observer
DGM-16954: Unable to open and lock the Observer configuration file
```

Use the DGMGRL `SHOW CONFIGURATION VERBOSE` command to determine the location of the observer that is currently associated with the broker configuration.

```
DGMGRL> SHOW CONFIGURATION VERBOSE;

Configuration - DRSolution

  Protection Mode: MaxAvailability
  Databases:
    North_Sales  - Primary database
    South_Sales  - (*) Physical standby database

  (*) Fast-Start Failover target

  Properties:
    FastStartFailoverThreshold      = '60'
    OperationTimeout                = '30'
    FastStartFailoverLagLimit       = '30'
    CommunicationTimeout            = '180'
    FastStartFailoverAutoReinstate  = 'TRUE'
    FastStartFailoverPmyShutdown    = 'TRUE'
    BystandersFollowRoleChange      = 'ALL'

Fast-Start Failover: ENABLED

  Threshold:        180 seconds
  Target:           South_Sales
  Observer:         observer.example.com
  Lag Limit:        30 seconds (not in use)
  Shutdown Primary: TRUE
  Auto-reinstate:   TRUE

Configuration Status:
SUCCESS
```

9.5.2 Problems Because the Observer Has Stopped

If the observer host machine crashes, the broker configuration is no longer observed and fast-start failover is no longer possible. In this case, you may have to move the observer to a new host if the original host machine cannot be repaired in a timely fashion. To move the observer, you must stop allowing the first observer to observe this broker configuration, and then start a new observer on another host.

1. Issue the DGMGRL `STOP OBSERVER` command to sever the link between the original observer and the broker configuration:

   ```
   DGMGRL> STOP OBSERVER;
   Done.
   ```

2. Issue the DGMGRL `SHOW CONFIGURATION VERBOSE` command to verify that the configuration is no longer being observed:

```
DGMGRL> SHOW CONFIGURATION VERBOSE;

Configuration - DRSolution

  Protection Mode: MaxAvailability
  Databases:
    North_Sales  - Primary database
    South_Sales  - (*) Physical standby database

  (*) Fast-Start Failover target

  Properties:
    FastStartFailoverThreshold      = '60'
    OperationTimeout                = '30'
    FastStartFailoverLagLimit       = '30'
    CommunicationTimeout            = '180'
    FastStartFailoverAutoReinstate  = 'TRUE'
    FastStartFailoverPmyShutdown    = 'TRUE'
    BystandersFollowRoleChange      = 'ALL'

Fast-Start Failover: ENABLED

  Threshold:        180 seconds
  Target:           South_Sales
  Observer:         (none)
  Lag Limit:        30 seconds (not in use)
  Shutdown Primary: TRUE
  Auto-reinstate:   TRUE

Configuration Status:
SUCCESS
```

3. Note that you do not need to issue the DGMGRL `SHOW CONFIGURATION` command to verify that the observer has actually stopped. Successful completion of the DGMGRL `STOP OBSERVER` command will allow a new observer to become associated with the configuration.

9.5.3 Capturing Observer Actions in the Observer Log File

You can use the DGMGRL `-logfile` option to start the observer, so that all of the troubleshooting actions performed in Section 9.5.1 can be captured in a file. For example:

```
% dgmgrl -logfile observer.log / "start observer"
```

All the observer output is then recorded in a file named `observer.log` in the current working directory where you issued the DGMGRL command.

Note that this is not only useful for troubleshooting problems with the observer, but also for troubleshooting problems with fast-start failover in general.

A

Changed and Deprecated Features

This appendix describes the Data Guard broker features that were changed, deprecated, or made obsolete. This appendix provides the following sections:

- Changed Features
- Deprecated and Obsolete Features

A.1 Changed Features

This section contains information about Data Guard broker features that were changed:

- General Features That Changed
- Changed Properties
- Changed State Names
- Changed DGMGRL Features in Release 10.2

A.1.1 General Features That Changed

The following sections list features that have changed:

- Changed Features in Release 11.2
- Changed Features in Release 11.1
- Changed Features in Release 10.2

A.1.1.1 Changed Features in Release 11.2

- A restart of the primary database when upgrading the protection mode from maximum availability to maximum protection is no longer performed. If upgrading from maximum performance to maximum protection mode, a restart can be avoided, if the configuration is first upgraded to maximum availability mode.

A.1.1.2 Changed Features in Release 11.1

- Changed database startup behavior.

  The Data Guard broker honors the startup option specified by the database administrator. This removes the current requirement that databases belonging in a Data Guard configuration only be mounted. Previously, a primary or a logical standby database would be opened even if the DBA had only mounted it, but this will no longer happen. This also means that Data Guard actions will not start

taking place until the database is opened in the case of a primary or a logical standby database. The DBA must explicitly open the database.

- Database States and descriptions have changed.

  See Table A–4, " Database State Name Changes in Release 11.1"

- The `ADD DATABASE CONNECT IDENTIFIER IS` clause is now optional if a pre-existing standby is being added to the configuration.

A.1.1.3 Changed Features in Release 10.2

- Changed failover behavior

  After failover to a logical standby database, the broker disables all standby databases in the configuration that were not directly involved in the failover. The disabled databases must be re-created before they can serve as standby to the new primary database. Previously, failover to a logical standby database resulted in the broker disabling only physical standby databases.

- Changed behavior for the `DelayMins` database property

  When the `DelayMins` property is set to 0, log apply services apply redo data to the standby database as soon as possible, including using real-time apply if the standby database is configured with standby redo logs.

  Additionally, if you specified the `DelayMins` and `RealTimeApply` properties on your release 10.1 database, the delay behavior might change unexpectedly. This is due to the `RealTimeApply` property being deprecated in release 10.2

  For example, if your release 10.1 database had the `DelayMins` property set to a nonzero value and the `RealTimeApply` property set to `YES`, the delay setting was ignored because the real-time apply setting overrides any delay settings. However, because in release 10.2 the `RealTimeApply` property is deprecated, the release 10.2 database will no longer be affected by the `RealTimeApply` property and the application of redo according to the time specified by the `DelayMins` property may be unexpectedly delayed.

A.1.2 Changed Properties

The following sections list properties that have changed:

- Changed Properties in Release 11.2
- Changed Properties in Release 11.1
- Changed Properties in Release 10.2

A.1.2.1 Changed Properties in Release 11.2

The behavior of the following properties was changed in release 11.2:

Table A–1 Changed Properties in Release 11.2

Property Name	Description of Change
`StatusReport`	The `StatusReport` property is now included automatically when a `SHOW DATABASE` command is issued, so there is no longer any need to specify it on the command line. This new behavior enhances the output of the `SHOW DATABASE` command to include a list of errors or warnings about the status of the database. In an Oracle RAC database environment, it also includes the status of all running instances. This functionality is available starting with Oracle Database 11*g* Release 2 (11.2.0.2).

A.1.2.2 Changed Properties in Release 11.1

The following properties were changed in release 11.1:

Table A–2 Changed Properties in Release 11.1

Property Name	Description of Change
`InitialConnectIdentifier`	This property has been changed to `DGConnectIdentifier`. The value of `DGConnectIdentifier` will be used for all Data Guard network traffic, all of the time. When upgrading a 10*g* configuration to Oracle Database release 11.1, the `InitialConnectIdentifier` value will be retained as the new `DGConnectIdentifier` value for that database. Before the upgrade, you must ensure that the `InitialConnectIdentifier` will reach all instances if this is an Oracle RAC database.
`LsbyTxnConsistency`	This property has been changed to `LsbyPreserveCommitOrder`

A.1.2.3 Changed Properties in Release 10.2

The following properties were changed in release 10.2:

Table A–3 Changed Properties in Release 10.2

Property Name	Description of Change
`ApplyInstanceTimeout`	The default value has changed from 120 seconds to 0 seconds.
`ApplyParallel`	New default is `AUTO`
`DelayMins`	Using this property is the preferred method for delaying the application of redo data to a standby database. If you set `DelayMins` property to 0: ■ Any previously configured `DelayMins` setting will be ignored. ■ The standby database will apply redo data as soon as possible, including using real-time apply if the standby database is configured with standby redo logs. If you have more than one physical standby database in the configuration, Oracle recommends using Flashback Database after a failing over to a physical standby databases. You can use Flashback Database to reinstate any physical standby databases that were disabled but were not the target of the failover.
`LogArchiveMaxProcesses`	Range of valid values is now from 1 to 30 (was from 1 to 10)

Table A–3 (Cont.) Changed Properties in Release 10.2

Property Name	Description of Change
LsbyTxnConsistency	Now imports the value of PRESERVE_COMMIT_ORDER from SYSTEM.LOGSTDBY$PARAMETERS instead of TRANSACTION_CONSISTENCY
NetTimeout	The default value has changed from 30 seconds to 180 seconds.

A.1.3 Changed State Names

Table A–4 shows the database state names that changed in Release 11.1:

Table A–4 Database State Name Changes in Release 11.1

Database Type	State Name Prior to Oracle Database 11.1	New State Name as of Oracle Database 11.1
Primary	ONLINE	TRANSPORT-ON
Primary	LOG-TRANSPORT-OFF	TRANSPORT-OFF
Physical standby	ONLINE	APPLY-ON
Physical standby	LOG-APPLY-OFF	APPLY-OFF
Physical standby	READ-ONLY	None[1]
Logical standby	ONLINE	APPLY-ON
Logical standby	LOG-APPLY-OFF	APPLY-OFF
All	OFFLINE	None[2]

[1] Prior to Release 11.1, the READ-ONLY state allowed a physical standby database to be opened read-only. In Release 11.1, this database state has been deprecated because a physical standby database can apply redo while opened read-only. Therefore this state change operation through the broker is no longer necessary.

[2] This database state has been deprecated. You can shut down a database using either the SQL*Plus SHUTDOWN command or the DGMGRL SHUTDOWN command.

See Also: Section 4.2, "Database States"

A.1.4 Changed DGMGRL Features in Release 10.2

Data Guard command-line interface (DGMGRL) commands that changed in Oracle Database 10*g* (10.2) include:

- FAILOVER
- EDIT CONFIGURATION
- EDIT DATABASE
- SHOW CONFIGURATION

See Also: Chapter 7, "Data Guard Command-Line Interface Reference"

A.2 Deprecated and Obsolete Features

The following sections list features that have been deprecated or made obsolete:

- Deprecated and Obsolete Features in Release 11.2
- Deprecated and Obsolete Features in Release 11.1

- Deprecated and Obsolete Features in Release 10.2

A.2.1 Deprecated and Obsolete Features in Release 11.2

This section contains information about Data Guard broker features that were deprecated or are obsolete.

- The `HostName` configurable instance-specific property has been deprecated. This is in effect as of Oracle Database 11*g* Release 2 (11.2.0.2).

A.2.2 Deprecated and Obsolete Features in Release 11.1

This section contains information about Data Guard broker features that were deprecated or are obsolete.

- Deprecated database properties include:
  - LocalListenerAddress
  - The `READ-ONLY` state for physical standby databases has been deprecated
  - The `OFFLINE` and `ONLINE` states have been deprecated
- The `ADD DATABASE ... MAINTAINED AS {PHYSICAL|LOGICAL}` statement is deprecated. Specifically, the `MAINTAINED AS` clause of `ADD DATABASE` command is deprecated. The broker now automatically finds out the standby database type.

A.2.2.1 Deprecated and Obsolete Properties in Release 11.1

Table A–5 Deprecated and Obsolete Properties in Release 11.1

Deprecated Property	Replacement Property (if any)
`LsbyTxnConsistency`	`LsbyPreserveCommitOrder`

A.2.3 Deprecated and Obsolete Features in Release 10.2

This section contains information about Data Guard broker features that were deprecated or are obsolete.

A.2.3.1 Deprecated and Obsolete Properties in Release 10.2

Table A–6 Deprecated and Obsolete Properties in Release 10.2

Deprecated Property	Replacement Property (if any)
`ApplyNext`	No replacement.
`ApplyNoDelay`	Set the `DelayMins` property to zero (0).
`AsyncBlocks`	None. Specifying the number of blocks is no longer necessary. The transport mode is determined *automatically* by redo transport services, based on the protection mode defined for the Data Guard configuration.
`RealTimeApply`	Set the `DelayMins` property to zero (0).

B

Data Guard Broker Upgrading and Downgrading

This appendix guides you through the process of upgrading or downgrading the Oracle databases and Oracle Enterprise Manager in a broker configuration. It contains the following topics:

- Section B.1, "Upgrade from Release 9.2.0 to Release 11.2"
- Section B.2, "Upgrade from Release 10.n and 11.1 to Release 11.2"
- Section B.3, "Downgrade from Release 11.2"

See Also: Chapter 2, "Oracle Data Guard Installation"

B.1 Upgrade from Release 9.2.0 to Release 11.2

If you are currently running an Oracle Data Guard release 9.2.0 configuration, you must upgrade to Oracle Database release 11.2, and re-create the broker configuration, as follows:

1. Delete (remove) the release 9.2.0 broker configuration using Data Guard Manager or DGMGRL release 9.2.0. For example, the DGMGRL `REMOVE CONFIGURATION` command can be used.
2. If using DGMGRL, clear the `LOG_ARCHIVE_DEST_`*n* initialization parameter settings by using the `ALTER SYSTEM SET LOG_ARCHIVE_DEST_`*n*`=" "` SQL*Plus command.
3. Upgrade the database software to Oracle release 11.2. See the Oracle Database installation documentation that is appropriate for your operating system.
4. Oracle Enterprise Manager and Data Guard Manager release 9.2.0 cannot manage a broker configuration running Oracle Data Guard release 11.2.

   See Also: My Oracle Support note 787461.1 at `http://support.oracle.com` for information about which versions of Enterprise Manager Grid Control are required to manage the full set of Data Guard features in various Oracle Database releases

5. If you are using DGMGRL release 9.2.0, you must upgrade to Data Guard command-line interface release 11.2:
   - DGMGRL release 9.2.0 is not compatible with Oracle Data Guard release 11.2.

> **Note:** Existing Oracle9*i* command-line scripts are supported in Oracle Database 11.2 for non-Oracle RAC databases. See Appendix A for information about deprecated commands.

- DGMGRL release 11.2 is not compatible with Oracle Data Guard release 9.2.0.

> **Note:** Oracle Database 11.2 command-line scripts are not supported in Oracle9*i*.

6. Invoke Enterprise Manager or the DGMGRL command-line interface, and re-create the broker configuration.

B.2 Upgrade from Release 10.*n* and 11.1 to Release 11.2

If you are currently running an Oracle Data Guard release 10.*n* or 11.1 configuration, you can upgrade the database software to Oracle release 11.2 using the Oracle Database installation documentation that is appropriate for your operating system.

> **Note:** Prior to Release 11.2, the configuration file was restricted to reside only on disks having the same sector size (physical block size) as that upon which the file was initially created. This was not a problem because there was typically a single sector size in use within a given broker configuration. In anticipation of having mixed sector sizes somewhere within a given broker configuration, the 11.2 broker configuration file is now completely insensitive to the underlying sector size, so long as the sector size is 4KB or less.
>
> Conversion of the configuration file to be insensitive to the underlying sector size occurs during the upgrade processing in Step 5 below.

Step 1 Disable fast-start failover if it is enabled.

Issue the following DGMGRL command to disable fast-start failover:

```
DGMGRL> DISABLE FAST_START FAILOVER;
```

Step 2 Shut down the 10.*n* or 11.1 Data Guard broker, whichever version you are running.

Disable the broker's management of the configuration and then stop the broker. For example:

1. Issue the following DGMGRL command to disable the broker's active management of the databases in the Data Guard configuration:

   ```
   DGMGRL> DISABLE CONFIGURATION;
   ```

2. Issue the following SQL*Plus statement to stop the broker:

   ```
   SQL> ALTER SYSTEM SET DG_BROKER_START=FALSE;
   ```

Step 3 Make a copy of the current broker configuration files.

Make a copy of the current broker configuration files, as indicated by the following initialization parameters: `DG_BROKER_CONFIG_FILE1` and `DG_BROKER_CONFIG_FILE2`.

Step 4 Upgrade the Oracle Database software to release 11.2.

For step-by-step upgrade instructions, see the Oracle Database installation documentation that is appropriate for your operating system.

The DGMGRL command-line interface must also be upgraded to release 11.2 in order to manage and monitor a broker configuration running Oracle Data Guard release 11.2. DGMGRL release 11.2 cannot be used to manage Data Guard releases 10.n or 11.1.

> **Note:** Existing release 10.*n* or 11.1 DGMGRL command-line scripts are supported by the DGMGRL command-line interface available in release 11.2.
>
> Release 11.*n* DGMGRL command-line scripts are not guaranteed to be supported by Oracle Database release 10.*n*.

Step 5 Start the broker.

After the upgrade, start the release 11.2 Data Guard Broker. For example:

1. Issue the following SQL*Plus statements to start the broker:

```
SQL> ALTER SYSTEM SET DG_BROKER_START=TRUE;
```

2. Issue the following DGMGRL command to enable the broker's active management of the databases in the Data Guard configuration:

```
DGMGRL> ENABLE CONFIGURATION
```

The first time the release 11.2 broker starts, it will detect the existence of the release 10.*n* and 11.1 broker configuration files and automatically upgrade them to include any new properties that were introduced in release 11.2 (for example, the fast-start failover properties). This automatic conversion is transparent, permanent, and occurs only once.

> **Note:** As of this automatic upgrade that occurs in Step 5, the configuration file may henceforth reside on a disk having any supported disk sector size (physical block size) up to and including 4KB sectors.

> **Note:** The observer that was started prior to the upgrade will automatically be stopped and unable to observe the configuration once the upgrade is complete. You must use an 11.2 version of the Oracle Observer software to observe Oracle databases running version 11.2 or higher.

See Also: Appendix A, "Changed and Deprecated Features"

B.3 Downgrade from Release 11.2

If you have upgraded to release 11.2 and want to downgrade to your prior release, you must downgrade the database release and re-create the broker configuration as follows:

1. Delete (remove) the release 11.2 broker configuration using Enterprise Manager or DGMGRL release 11.2. For example, the DGMGRL `REMOVE CONFIGURATION` command can be used.
2. Downgrade the Oracle Database software to the prior Oracle release. See the Oracle Database documentation that is appropriate for your operating system.
3. You can downgrade the Data Guard broker to release 10.*n* or 11.1 as follows:
   - If you are confident that you made no changes to your broker configuration after upgrading to release 11.2, you can copy the broker configuration files that you created during the upgrade procedure (described in Section B.2). Then, invoke Enterprise Manager or the DGMGRL command-line interface and reenable the broker configuration as it existed at the time you made that copy.
   - Alternatively, you can invoke Enterprise Manager or the DGMGRL command-line interface to re-create the broker configuration.
4. You can downgrade the Data Guard broker to Oracle release 9.2.0, as follows:
   - If you were using Enterprise Manager, you can continue to use the Oracle Enterprise Manager release 10.2 to manage your 9.2.0 broker configuration. You can also downgrade to the Data Guard Manager by re-installing Oracle Enterprise Manager release 9.2.0.
   - Invoke Enterprise Manager, the Data Guard Manager, or the DGMGRL command-line interface and re-create the broker configuration.

Glossary

apply instance

In an Oracle Real Application Clusters (Oracle RAC) databases environment, the apply instance is the one instance applying archived redo data to a standby database.

broker

A distributed management framework that automates and simplifies most of the complex operations required to create, control, and monitor a Data Guard configuration.

broker configuration

A logical grouping of the primary and standby databases (including redo transport services and log apply services) of a Data Guard configuration.

See also Data Guard configuration.

bystander standby database

A standby database that is not the target of, or directly involved in, a switchover or failover operation.

configuration object

A named collection of database objects. It is an abstraction of a Data Guard configuration.

database guard

The database guard controls whether or not modifications can be made to the tables in a logical standby database.

database object

A named object that corresponds to a primary or standby database in a Data Guard configuration. The broker uses this object to manage and control the state of a single database and to associate properties with the database.

Data Guard command-line interface

The Data Guard command-line interface (DGMGRL) enables you to control and monitor a Data Guard configuration from the DGMGRL prompt or within scripts.

Data Guard configuration

A distributed computing system that prevents or minimizes losses due to unplanned events (for example, human errors, environmental disasters, or data corruption) as well as to planned downtime (such as for routine maintenance tasks).

See also broker configuration.

Data Guard environment

The physical configuration of the primary and standby databases. The environment depends on many factors, including the:

- Number of standby databases associated with a primary database
- Number of host systems used by the databases
- Directory structures of the machines used by the databases
- Network configuration
- Redo transport services
- Log apply services

The Data Guard environment can be managed manually by a DBA, automatically using Enterprise Manager or the Data Guard command-line interface (DGMGRL) or a combination of all of these.

default state

The initial runtime state in which the database object will run when you enable broker management of the configuration. The actual default state can vary depending on the role (primary or standby) in which the database is running.

See also intended state.

failover

Failover changes a standby database into the role of a primary database and disables the old primary database.

See also fast-start failover and manual failover.

fast-start failover

Enables a failover *automatically* when the primary database becomes unavailable. When fast-start failover is enabled, the broker determines if a failover is necessary and automatically, quickly, and reliably fails over to a designated standby without requiring that you perform any manual steps to invoke the failover.

See also manual failover.

instance object

A named object; a database object is a collection of one or more named instance objects. The broker uses this object to manage and control the state of the database with which the instance is associated, and to associate instance-specific properties with this instance of the database.

intended state

The runtime state of a database object while it is enabled for management by the broker.

See also default state.

lights out computing

Refers to computing equipment or software whose operations are automated, requiring little to no intervention by human administrators.

The term "lights out" originated from when computing centers were located in one room and contained a number of servers that were kept under lock and key and in the dark. Under normal operation, the room was not entered by human administrators, and all operations in the room were automated.

logical standby database

A logical standby database takes standard Oracle archived redo log files, transforms them back into SQL transactions, and then applies them to an open standby database. Although changes can be applied concurrently with end-user access, the tables being maintained through regenerated SQL transactions allow read-only access to users of the logical standby database. Because the database is open to allow application of reconstructed SQL transactions, it is physically different from the primary database. The database tables can have different indexes and physical characteristics from their primary database peers, but the tables must maintain logical consistency from an application access perspective, to fulfill their role as a standby data source.

manual failover

A failover that is initiated by the DBA who first determines a failover is necessary and then invokes one by clicking `FAILOVER` in Enterprise Manager or by issuing the DGMGRL `FAILOVER` command. The word *manual* is used to contrast this type of failover with a fast-start failover.

See also fast-start failover.

observer

A DGMGRL client that continuously monitors the primary and target standby databases, evaluates whether failover is necessary, and initiates a fast-start failover when conditions warrant.

physical standby database

A physical standby database is an exact copy of a primary database. While the primary database is open and active, a physical standby database uses Redo Apply to apply redo data received from the primary database. Redo Apply can run on a physical standby database instance that is mounted. If a license for the Oracle Active Data Guard option has been purchased, Redo Apply can also run on a physical standby database instance that is open. See *Oracle Data Guard Concepts and Administration* for more details.

primary database

A production database from which one or more standby databases is created and maintained. Every standby database is associated with one and only one primary database. A single primary database can, however, support multiple standby databases. The Data Guard broker monitor (DMON) maintains the master copy of the binary configuration file with the primary database, ensuring that each standby database's copy of the file is kept up to date as changes are made.

The broker refers to this database using the value in the `DB_UNIQUE_NAME` initialization parameter which is defined to be globally unique.

profiles

The description of a database object including its current state (on or off), properties, and current status (for example, its health). This description is maintained persistently by the broker in its binary configuration file.

read-only mode

A mode in which a database can be opened that allows queries, but disallows modifications.

A physical standby database can be opened read-only so that queries may be performed. If a license for the Oracle Active Data Guard option has been purchased, a physical standby database can be open while Redo Apply is active. This capability is known as real-time query. See *Oracle Data Guard Concepts and Administration* for more details.

Redo Apply

A physical standby database is kept synchronized with the primary database through Redo Apply, which recovers the redo data received from the primary database and applies the redo to the physical standby database.

reinstatement

Reinstatement is the process of turning a database, including the old primary database, that had been disabled after a failover operation into a viable standby database for the new primary database. Flashback database must be enabled on a database in order to reinstate it.

snapshot standby database

A snapshot standby is a fully updatable standby database that is created from a physical standby database. On snapshot standby databases, redo data is received but not applied until the snapshot standby database is converted back to a physical standby database.

SQL Apply

A logical standby database is kept synchronized with the primary database through SQL Apply, which transforms the data in the redo received from the primary database into SQL statements and then executes the SQL statements on the standby database.

standby database

A copy of a primary database created using a backup of your primary database. Standby databases are kept synchronized with the primary database by applying archived redo data over time from the primary database to each standby database. The standby database can take over processing from the primary database, providing nearly continuous database availability. A standby database has its own server parameter file, control file, and data files. It also has a copy of the broker's configuration file, kept up to date at the direction of the DMON process running in the primary database instance.

The broker refers to a standby database by its globally unique name that is stored in its `DB_UNIQUE_NAME` initialization parameter.

See also logical standby database and physical standby database.

Index

A

Add Standby Database wizard
  creating a broker configuration, 3-8
  definition, 1-8
  introduction, 1-8
adding
  standby database to the broker configuration, 6-4
ALTER SYSTEM statement
  starting the broker, 6-1
altering
  properties
    database, 6-11
  states
    database, 6-12
AlternateLocation property, 8-14
  setting log apply services, 4-9
application integration, 1-6
apply errors
  managing, 4-13
apply instance, 4-14
  failover, 4-14
  PreferredApplyInstance property, 4-14
  selecting, 4-14
ApplyInstanceTimeout property, 4-16, 8-15
ApplyParallel property, 4-12, 8-15
architecture
  Data Guard broker, 1-7
ARCHIVE_LAG_TARGET initialization parameter
  setting in a broker configuration, 8-16
archived redo logs
  destination and configuration parameters, 3-1
  in a Data Guard configuration, 3-2
  primary database setup, 2-3
ArchiveLagTarget property, 8-16
ASYNC redo transport service, 4-8
Automatic Storage Management (ASM)
  creating a standby database that uses, 2-2

B

background processes
  DMON, 1-9
banners
  suppressing from DGMGRL command-line
    interface output, 7-1
before you perform a switchover, 5-4
before you use DGMGRL, 6-1
benefits
  Data Guard broker, 1-3
  high availability, 1-4
  scalability, 1-4
  with Oracle Real Application Clusters, 1-4
binary configuration file, 1-10
Binding property, 8-16
broker
  components, 1-7
  configuration, 1-1
  Data Guard configuration file, 1-11
  drc* log files, 9-1
  installation, 2-2
  introduction, 1-2
  managing databases, 4-1
  user interfaces, 1-8
broker configurations
  benefits, 1-3
  changing roles, 3-9
  components, 3-1
  creating, 6-2, 7-12
  Data Guard configuration file, 1-9
  database objects, 1-7
  database profiles, 1-6
  disabling databases, 3-10, 7-14
  effects of removing metadata from, 7-41
  enabling, 6-6, 7-28
  enabling databases, 3-9, 3-10, 6-6, 7-28
  enabling fast-start failover, 7-30
  health, 1-9, 3-11
  instance objects, 1-7
  life cycle, 3-8
  management, 1-6, 1-8, 1-9, 1-10
  monitoring, 6-22
  objects, 1-6
  Oracle Net Services configuration, 1-5, 1-8
  overview, 3-1
  properties, 4-4
  protection modes, 7-19
  setting protection mode, 4-16
  status modes, 3-11
  supported, 1-6, 3-1
bystander standby databases, 5-4
  reintegrating into configuration, 5-10

BystandersFollowRoleChange property, 8-2

C

CFS
See cluster file system
changed features, A-1
changing
properties
databases in a broker configuration, 3-10, 4-6
roles
within the broker configuration, 3-9
states
databases in a broker configuration, 4-3
of databases in a broker configuration, 6-11
See also editing
cluster file system (CFS)
broker configuration files, 3-5
command prompts
suppressing from DGMGRL command-line interface output, 7-1
command-line interface
See Data Guard command-line interface (DGMGRL)
CommunicationTimeout property, 8-2
COMPATIBLE initialization parameter
requirements for setting, 2-3
complete failover, 5-7, 7-34
components
broker, 1-7
Data Guard configuration, 3-1
configurable properties, 4-4
AlternateLocation, 8-14
ApplyInstanceTimeout, 8-15
ApplyParallel, 8-15
ArchiveLagTarget, 8-16
Binding, 8-16
database, 4-6, 8-12
DbFileNameConvert, 8-17
DelayMins, 8-18
DGConnectIdentifier, 8-19
FastStartFailoverTarget, 8-20
LogArchiveFormat, 8-21
LogArchiveMaxProcesses, 8-21
LogArchiveMinSucceedDest, 8-22
LogArchiveTrace, 8-22
LogFileNameConvert, 8-23
LogShipping, 8-24
LogXptMode, 8-25
LsbyASkipCfgPr, 8-26
LsbyASkipErrorCfgPr, 8-26
LsbyASkipTxnCfgPr, 8-27
LsbyDSkipCfgPr, 8-28
LsbyDSkipErrorCfgPr, 8-28
LsbyDSkipTxnCfgPr, 8-29
LsbyMaxEventsRecorded, 8-30
LsbyMaxServers, 8-31
LsbyMaxSga, 8-30
LsbyPreserveCommitOrder, 8-31
LsbyRecordAppliedDdl, 8-32
LsbyRecordSkipDdl, 8-32
LsbyRecordSkipErrors, 8-33
managing redo transport services, 4-7
MaxConnections, 8-33
MaxFailure, 8-34
NetTimeout, 8-35
PreferredApplyInstance, 8-36
RedoCompression, 8-36
ReopenSecs, 8-37
SidName, 8-37
StandbyArchiveLocation, 8-38
StandbyFileManagement, 8-39
StaticConnectIdentifier, 8-39
TopWaitEvents, 8-12
configuration files
fast-start failover configuration (fsfo.dat) file, 5-35
See Also Data Guard configuration file
configuration properties
BystandersFollowRoleChange, 8-2
CommunicationTimeout, 8-2
FastStartFailoverAutoReinstate, 8-3
FastStartFailoverLagLimit, 8-3
FastStartFailoverPmyShutdown, 8-4
FastStartFailoverThreshold, 8-5
OperationTimeout, 8-5
CONNECT command, 6-3, 7-8
connecting
privileges required for Data Guard broker configurations, 7-4
starting the observer, 6-10
to the primary database, 6-2
controlling
available SGA memory, 4-13
transaction commit order, 4-13
CREATE CONFIGURATION command, 6-3, 7-12
creating
a broker configuration, 6-2, 6-3, 7-12
with the Add Standby Database wizard, 3-8
a standby database, 3-8

D

Data Guard
troubleshooting, 9-1
Data Guard broker
changed features, A-1
deprecated features, A-1
See Also broker
Data Guard command-line interface
commands
ENABLE FAST_START FAILOVER, 7-30
SET STATE, 4-14
DG_BROKER_START initialization parameter, 2-2
enabling a database, 6-6
introduction, 1-2, 1-9
Data Guard command-line interface (DGMGRL)
banners from output, 7-1
commands

CONNECT, 7-8
CREATE CONFIGURATION, 7-12
DISABLE CONFIGURATION, 7-14
DISABLE DATABASE, 7-15
DISABLE FAST_START FAILOVER, 5-29, 7-16
DISABLE FAST_START FAILOVER CONDITION, 7-17
EDIT CONFIGURATION (property), 7-18
EDIT CONFIGURATION (protection mode), 7-19
EDIT DATABASE (property), 7-21
EDIT DATABASE (rename), 7-23
EDIT DATABASE (state), 7-24
EDIT INSTANCE (AUTO PFILE), 7-25
EDIT INSTANCE (property), 7-26
ENABLE CONFIGURATION, 7-28
ENABLE DATABASE, 7-29
ENABLE FAST_START FAILOVER CONDITION, 7-32
EXIT, 7-33
FAILOVER, 6-18
HELP, 7-37
QUIT, 7-39
REMOVE CONFIGURATION, 7-41
REMOVE DATABASE, 7-43
REMOVE INSTANCE, 7-45
SHOW CONFIGURATION, 7-46
SHOW DATABASE, 7-48
SHOW FAST_START FAILOVER, 7-51
SHOW INSTANCE, 7-52
SHUTDOWN, 7-54
STARTUP, 7-58
SWITCHOVER, 6-15, 7-61
creating a configuration, 6-2
DG_BROKER_START initialization parameter, 7-4
enabling the configuration, 6-6
FSFO.DAT file creation, 7-55
monitoring broker configurations, 6-22
performing routine management tasks, 6-11
prerequisites, 6-1
setting critical database properties, 6-4
setting up standby redo log files, 4-18
single command mode, 7-1
starting, 6-2, 7-1
stopping, 7-5
string values, 7-4
summary of commands, 7-3
suppressing command prompts, 7-1
Data Guard configuration file
for an Oracle RAC database, 3-5
in a CFS area, 3-5
inconsistent values from server parameter file, 8-7
on a raw device, 3-6
relationship to DMON process, 1-9
renaming, 1-10
setting up, 3-3
Data Guard configurations
automated creation of, 1-5
background, 3-2
supported, 3-1
Data Guard monitor (DMON), 1-9
interaction with the Oracle database, 1-9
maintaining configuration data, 1-10
managing objects, 3-2, 3-9, 6-6
Oracle database background processes, 1-9
overview, 1-9
removing objects, 6-13
starting with the DG_BROKER_START parameter, 3-7
two-way network communication, 1-10
data protection modes
See protection modes
database resources
monitoring, 1-6
databases
changing the state of, 6-11
connecting to, 6-2
creating and adding to a broker configuration, 1-8
dependencies, 4-1
disabling management of, 7-14
during
fast-start failover, 5-13
manual failover, 5-6
switchover, 5-3
enabling, 6-6
health, 4-25
installation for broker management, 2-2
monitorable database properties, 4-6, 8-6 to 8-11
network setup, 1-10, 2-2
objects, 1-6
definition, 1-7
in a broker configuration, 1-7
prerequisites for broker configurations, 2-2
properties, 1-8, 4-6, 8-12 to 8-39
property management, 1-11
reenabling after a role transition, 5-11
removing
from a broker configuration, 6-14
restarting
after fast-start failover, 5-37
shutting down
effect on fast-start failover, 5-21, 5-24, 5-37
states, 4-1
dependencies, 4-1
transitions, 4-3
status, 4-25
DB_FILE_NAME_CONVERT initialization parameter
initialization parameters
setting DB_FILE_NAME_CONVERT in a broker configuration, 8-17
DBA_LOGSTDBY_EVENTS table
managing, 4-14
DbFileNameConvert property, 8-17
delaying
application of redo data with DelayMins property, 4-12

DelayMins property, 8-18
delaying log apply services, 4-12
deprecated features, A-1
destinations
archived redo log file parameters, 3-1
viewing the LogXptStatus property, 8-7
DG_BROKER_CONFIG_FILEn file, 1-10, 3-5
in a CFS area, 3-5
on a raw device, 3-6
DG_BROKER_START initialization parameter, 2-2, 6-1, 7-4
DGConnectIdentifier property, 8-19
DGMGRL
reinstating a database, 5-12
DGMGRL commands
FAILOVER, 7-34
SWITCHOVER, 7-61
diagnostic information
sources, 9-1
DISABLE CONFIGURATION command, 7-14
example, 6-12
DISABLE DATABASE command, 7-15
example, 6-13
DISABLE FAST_START FAILOVER command, 5-29, 7-16
DISABLE FAST_START FAILOVER CONDITION command, 7-17
disabling
broker configuration, 6-12, 7-14
broker management of standby database, 7-15
databases, 3-10, 6-12, 6-13
fast-start failover, 5-28, 7-16
on a standby database, 5-29
See also each DISABLE command
disaster protection
benefits, 1-4
displaying
configuration information, 7-46
help for DGMGRL commands, 7-37
properties, 4-5
distributed management framework, 1-2
DMON
See Data Guard monitor (DMON)
downgrading
Data Guard, B-3
Oracle Enterprise Manager, B-3
protection mode, 4-20
drc* log files
broker diagnostic information, 9-1
during reinstatement, 5-27
recording failed reinstatement, 5-37

E

EDIT CONFIGURATION (Property) command, 7-18
EDIT CONFIGURATION (protection mode) command, 7-19
EDIT DATABASE (property) command, 7-21
example, 6-11
EDIT DATABASE (rename) command, 7-23
EDIT DATABASE (state) command, 7-24
example, 6-12
EDIT INSTANCE (AUTO PFILE) command, 7-25
EDIT INSTANCE (property) command, 7-26
editing
configurable properties, 7-18
database instance, 7-25, 7-26
database name, 7-23
database properties, 7-21
database state, 7-24
protection modes, 7-19
effect of switchovers on, 5-6
e-mail
reporting events, 1-8
ENABLE CONFIGURATION command, 6-6, 7-28
ENABLE DATABASE command, 7-29
ENABLE FAST_START FAILOVER command, 7-30
ENABLE FAST_START FAILOVER CONDITION command, 7-32
enabling
broker configuration, 3-9, 6-6
databases in a broker configuration, 3-10
fast-start failover, 5-15, 5-19
See also each ENABLE command
Enterprise Edition database
installation, 2-1
Enterprise Manager
Fast-Start Failover wizard
disabling fast-start failover, 5-29
wizards
automate standby database creation, 1-3
error messages
ORA-16795, 5-11
error status, 3-11
events
managing
in a logical standby database, 4-14
monitoring with Oracle Enterprise Manager, 1-3
Oracle Enterprise Manager, 1-6
reporting, 1-8
responding to, 1-6
EXIT command, 7-33
See also QUIT command

F

failover
failing over to a standby database, 7-34
Oracle Enterprise Manager, 1-8
FAILOVER command, 6-18, 7-34
failovers
and FastStartFailoverTarget property, 6-9
benefits, 1-5
broker tasks, 5-9
choosing a target standby database, 5-2
complete, 5-8, 5-9
defined, 5-1
fast-start failover, 5-23
effect on data protection mode, 5-15
V$DATABASE, 5-26

immediate, 5-10
managing, 5-1
fast-start, 5-13
manual, 5-6
manual
complete option, 5-7
effect on data protection mode, 5-8
immediate option, 5-7
reenabling disabled databases after, 5-10
starting manually, 5-8
using DGMGRL, 6-18
failures
observer, 5-34
fast-start failover, 5-1
configuration information in the fsfo.dat file, 5-35
defined, 5-13
DGMGRL client as the observer, 1-9
disabling, 5-28, 5-29
to perform manual failover, 5-30
enabling, 5-19, 7-30
instance failures, 5-21
monitoring by the observer, 5-21
observer monitoring, 5-21
observer overview, 5-13
performing manual failovers when enabled, 5-24
performing switchover when enabled, 5-24
querying V$DATABASE, 5-23
reinstating the former primary database, 5-36
requirements, 5-15
restarting databases after shut down, 5-37
setting the FastStartFailoverTarget property, 5-16, 6-9
setting the FastStartFailoverThreshold property, 5-17
shutdown abort, 5-21, 5-24
shutting down databases, 5-37
to Oracle RAC database instances, 5-22
unobserved, 5-34
verifying the environment, 5-20
viewing failover configuration statistics, 5-26
FastStartFailoverAutoReinstate property, 8-3
FastStartFailoverLagLimit property, 8-3
FastStartFailoverPmyShutdown property, 8-4
FastStartFailoverTarget property, 8-20
setting, 5-16, 6-9
FastStartFailoverThreshold property, 8-5
setting, 5-17
files
naming the server parameter file, 1-11
Flashback Database
reinstating databases, 5-12
use after failover, 5-10
flashback logs
reinstating a failed primary database, 5-12
FORCE option
disabling fast-start failover, 5-29, 7-16
performing a manual failover, 5-30
FS_FAILOVER_OBSERVER_HOST column
of V$DATABASE view, 5-33
FS_FAILOVER_OBSERVER_PRESENT column
of V$DATABASE view, 5-33
FS_FAILOVER_STATUS column
of V$DATABASE view
failed reinstatement, 5-27
FSFO.DAT file
overview, 5-35
START OBSERVER command, 7-55

H

health check, 1-6
monitoring, 1-9, 1-10
on primary database, 4-26
on standby database, 4-26
revealed by configuration status, 3-11
HELP command, 7-37
high availability
benefits, 1-4
levels of data protection, 4-16, 8-25
LogXptMode property, 8-25
restoring after fast-start failover, 5-36

I

immediate failover, 5-7, 7-34
InconsistentProperties property, 8-7
increased scalability
benefits, 1-4
initialization parameters
COMPATIBLE, 2-3
database configurable properties, 4-6
DG_BROKER_CONFIG_FILEn, 3-5
DG_BROKER_START, 2-2, 6-1
dynamic, 4-6
inconsistent, 8-7
LOG_ARCHIVE_DEST_n, 4-10
static, 4-6
See also server parameter file, 2-2
installation
ARCHIVELOG mode setup, 2-3
Data Guard, 2-1
Oracle Enterprise Manager, 2-1
Oracle Instant Client, 2-1, 7-55
prerequisites, 2-2
instances
failures, 5-21
objects
in a broker configuration, 1-7
removing, 7-17, 7-32, 7-45
restarting during the course of broker operations, 2-3
shutting down, 7-54
starting, 7-58
intended state
configuration health check, 3-11
invoking
the Data Guard command-line interface, 6-2

L

life cycle of a broker configuration, 3-8

local listener
statically registering services with, 2-3
log apply services
and apply instance failover, 4-14
and parallel apply, 4-12
apply instance, 4-14
configuring, 1-8
Data Guard configuration, 3-2
delayed application of redo data, 4-12
delaying, 8-18
in an Oracle RAC database, 4-14
managing, 4-11
selecting the apply instance, 4-14
verifying, 1-5
log files
broker, 5-37
FSFO.DAT
creating, 7-55
LOG_ARCHIVE_DEST_n initialization parameter
setting redo transport services, 4-10
setting the DELAY attribute, 8-18
setting the ENABLE and DEFER attributes, 8-24
setting the MANDATORY or OPTIONAL attributes, 8-16
LOG_ARCHIVE_FORMAT initialization parameter, 8-21
LOG_ARCHIVE_MAX_PROCESSES initialization parameter, 8-21
LOG_ARCHIVE_MIN_SUCCEED initialization parameter, 8-22
LOG_ARCHIVE_TRACE initialization parameter
setting LogArchiveTrace property, 8-22
LOG_FILE_NAME_CONVERT initialization parameter
setting LogFileNameConvert property, 8-23
LogArchiveFormat property, 8-21
LogArchiveMaxProcesses property, 8-21
LogArchiveMinSucceedDest property, 8-22
LogArchiveTrace property, 8-22
LogFileNameConvert property, 8-23
logical standby databases
and SQL Apply error handling, 4-13
and SQL Apply filters, 4-13
managing events, 4-14
SQL Apply, 4-13
state transitions, 4-4
switchover to the primary role, 5-4
LogShipping property, 8-24
LogXptMode property, 8-25
LogXptStatus property, 8-7
LsbyASkipCfgPr property, 8-26
LsbyASkipErrorCfgPr property, 4-13, 8-26
LsbyASkipTxnCfgPr property, 8-27
LsbyDSkipCfgPr property, 8-28
LsbyDSkipErrorCfgPr property, 4-13, 8-28
LsbyDSkipTxnCfgPr property, 8-29
LsbyFailedTxnInfo property, 8-8
LsbyMaxEventsRecorded property, 8-30
LsbyMaxServers property, 8-31
LsbyMaxSga property, 4-13, 8-30
LsbyParameters property, 8-8
LsbyPreserveCommitOrder property, 4-13, 8-31
LsbyRecordAppliedDdl property, 8-32
LsbyRecordSkipDdl property, 8-32
LsbyRecordSkipErrors property, 8-33
LsbySkipTable property, 8-8
LsbySkipTxnTable property, 8-9

M

management
benefits, 1-5
model, 1-6
Oracle Enterprise Manager, 1-8
managing
a broker configuration, 3-1, 6-1
apply errors, 4-13
databases, 4-1
DBA_LOGSTDBY_EVENTS table, 4-14
events
in a logical standby database, 4-14
fast-start failover, 5-13
local operations, 1-2
log apply services, 4-11
manual failover, 5-6
objects in a broker configuration, 1-7
parallel apply in a physical standby database, 4-12
remote operations, 1-2
roles, 5-1
fast-start failover, 5-13
manual failover, 5-6
switchover, 5-3
switchover, 5-3
MANDATORY attribute
set with the Binding property, 8-16
manual failover, 1-5, 5-1
complete option, 5-7
effect on protection modes, 4-21
immediate option, 5-7
performing when fast-start failover is enabled, 5-24, 5-30
starting, 5-8
manual role changes
performing when fast-start failover is enabled, 5-24
MaxConnections property, 8-33
MaxFailure property, 8-34
maximize availability, 1-5, 3-10, 8-25
maximize data protection, 1-5, 3-10, 8-25
maximize performance, 1-5, 3-10, 8-25
maximum availability
data protection mode, 4-17
maximum performance
data protection mode, 4-17
maximum protection
data protection mode, 4-17
monitorable properties, 4-4
database, 4-6
InconsistentProperties, 8-7

LogXptStatus, 8-7
LsbyFailedTxnInfo, 8-8
LsbyParameters, 8-8
LsbySkipTable, 8-8
LsbySkipTxnTable, 8-9
RecvQEntries, 8-9
SendQEntries, 8-10
monitoring
broker configurations, 1-9, 6-1, 6-22
local and remote databases, 1-6
observer
fast-start failover environment, 5-21
Oracle Enterprise Manager performance page, 3-10
through the command-line interface, 1-9

N

NetTimeout property, 8-35
networks
Data Guard configuration, 3-1
setting up files, 2-2
two-way communication, 1-10
normal status, 3-11

O

objects
broker configuration, 1-6, 3-2
disabling, 6-12
properties for databases, 1-11
relationship, 1-7
observer, 5-13
and FastStartFailoverThreshold property, 5-17
connecting to the configuration, 6-10
connection to the local computer, 5-33
detecting
database shutdown, 5-21, 5-24
instance failures, 5-21
failures, 5-34
finding host machine name, 5-33
installing Oracle Instant Client kit, 2-1, 7-55
lost connection, 5-34
maintaining fast-start failover configuration information, 5-35
monitoring, 5-21
shutting down, 5-37
using Oracle Wallet for connection credentials, 7-8
operations
complete failover, 7-34
disable broker management
effect on protection modes, 4-21
downgrade
effect on protection modes, 4-20
effect on protection modes, 4-19
enable broker management
effect on protection modes, 4-22
failover, 6-18
immediate failover, 7-34
manual failover
effect on protection modes, 4-21
removing a database from the configuration
effect on protection modes, 4-22
OperationTimeout property, 8-5
OPTIONAL attribute
set with the Binding property, 8-16
ORA-16661 message
reinstating a database, 5-11, 5-12
ORA-16795 message
re-creating a database, 5-11
Oracle Clusterware, 1-4
and instances of an Oracle RAC database, 1-4
integration with Data Guard broker, 1-4
recover failed instances, 1-4
Oracle Enterprise Manager, 1-8
Add Standby Database wizard, 1-8
database property pages, 1-8
downgrading, B-3
event management system, 1-6
integration, 1-8
integration with the Data Guard monitor, 1-8
introduction, 1-2, 1-7
making Oracle Net Services configuration changes, 1-5, 1-8
monitoring events, 1-3
performance tools and graphs, 1-8
setting up standby redo log files, 4-18
upgrading, B-1
wizards
creating standby databases, 1-8
Oracle Instant Client
installing, 2-1, 7-55
Oracle Managed Files (OMF)
creating a standby database that uses, 2-2
Oracle Net Services
configuration changes, 1-5, 1-8
installation prerequisites, 2-2
supported configuration, 3-1
two-way communication, 1-10
Oracle Real Application Clusters
and log apply services, 4-14
and setting the apply instance, 4-14
availability of instances with Oracle Clusterware, 1-4
benefits, 1-4
fast-start failover, 5-22
observer behavior in, 5-22
observer connection to instances, 5-33
Oracle Clusterware, 1-4
Oracle Universal Installer
installing Oracle Instant Client, 2-1, 7-55
Oracle Wallet
starting the observer, 7-8

P

parallel apply
and log apply services, 4-12
managing in a physical standby database, 4-12

performance
  Oracle Enterprise Manager tools, 1-8
physical standby databases
  managing parallel apply, 4-12
  state transitions, 4-3
  switchover to the primary role, 5-3
PreferredApplyInstance property, 4-14, 8-36
prerequisites
  installation, 2-2
  switchover, 5-4
primary database
  ARCHIVELOG mode, 2-3
  configuration, 3-1
  connecting to, 6-2
  constructing a standby database, 3-8, 6-2
  Data Guard configuration, 3-1
  during failover, 1-8
  during switchover, 5-6
  Flashback Database, 5-12
  health check, 4-26
  preparing for switchover, 5-4
  reinstating after a fast-start failover, 5-36
  shutting down when fast-start failover is enabled, 5-37
  standby redo log files on, 4-18
  state transitions, 4-3
  switching over to the standby role, 7-61
processes
  DMON, 1-9
  Oracle database, 1-9
properties, 4-6
  AlternateLocation, 4-9
  ApplyInstanceTimeout, 4-16
  ApplyParallel, 4-12
  configurable, 4-4
  database, 4-4
  DelayMins, 4-12
  LsbyASkipErrorCfgPr, 4-13
  LsbyDSkipErrorCfgPr, 4-13
  LsbyMaxSga, 4-13
  LsbyPreserveCommitOrder, 4-13
  managing, 1-11
  monitorable, 4-4
  PreferredApplyInstance, 4-14
  setting, 3-10, 6-4
    in server parameter file, 1-11, 2-2
  StandbyArchiveLocation, 4-9
property pages
  database, 1-8
protection modes
  after a failover, 4-21, 5-8, 5-15
  benefits, 1-5
  configuration, 7-19
  downgrading, 4-20
  redo transport services setup, 8-25
  setting for a broker configuration, 4-16
  updating, 3-10
  upgrading, 4-20

Q

QUIT command, 7-39
  See also EXIT command

R

raw devices
  and broker configuration files, 3-6
  sizing, 3-7
RecvQEntries property, 8-9
Redo Apply, 3-2, 5-6
redo transport services
  ASYNC mode, 4-8, 8-25
  configuring, 1-8
    data protection modes, 8-25
  Data Guard configuration, 3-1
  LogShipping property, 8-24
  managing, 4-7
  SYNC mode, 4-8, 8-25
  tuning, 4-10
  turning off, 4-9
  turning on, 4-8
  verifying, 1-5
RedoCompression property, 8-36
reinstatement, 5-36
  failure logged in broker drc* log files, 5-27
  Flashback Database requirement, 5-12
  flashback logs requirement, 5-12
  how to, 5-12
  logged in broker log files, 5-37
  ORA-16661 message, 5-11, 5-12
  requires standby redo log files, 4-18
  using DGMGRL, 5-12
  using Enterprise Manager, 5-12
relationship
  objects in a broker configuration, 1-7
REMOVE CONFIGURATION command, 7-41
  example, 6-15
REMOVE DATABASE command, 7-43
REMOVE INSTANCE command, 7-45
removing
  a standby database, 4-22
  See each REMOVE command
ReopenSecs property, 8-37
requests
  passing between sites, 1-10
requirements
  for enabling fast-start failover, 5-15
restarting
  databases
    when fast-start failover is enabled, 5-37
  instances, 2-3
role transitions
  changing, 3-9
  managing, 5-1
    fast-start failover, 5-13
    manual failover, 5-6
    switchover, 5-3

S

scripts
  using Data Guard command-line interface (DGMGRL), 7-1
selecting the apply instance, 4-14
SendQEntries property, 8-10
server parameter file
  broker property management, 1-11, 2-2
  filenames, 1-11
  inconsistent values from Data Guard configuration file, 8-7
server-side software, 1-9
SET STATE command
  and setting the apply instance, 4-14
setting
  configuration protection mode, 4-16
  database properties, 6-4
  log apply services, 4-9
  redo transport services, 4-10
SGA memory
  and SQL Apply, 4-13
SHOW CONFIGURATION command, 6-3, 6-4, 6-6, 7-46
SHOW CONFIGURATION VERBOSE
  example, 5-26
SHOW DATABASE command, 7-48
SHOW DATABASE VERBOSE command
  displaying properties, 4-5
SHOW FAST_START FAILOVER command, 7-51
SHOW FAST-START FAILOVER command
  example, 5-25
SHOW INSTANCE command, 7-52
showing
  See each SHOW command
shutdown
  FS_FAILOVER_OBSERVER_PRESENT view, 5-37
shutdown abort, 5-21
  effect on fast-start failover, 5-24
SHUTDOWN command, 7-54
shutting down an Oracle instance, 7-54
SidName property, 8-37
single command mode
  for Data Guard command-line interface, 7-1
SQL Apply, 3-2
  and logical standby databases, 4-13
  effect of switchovers on, 5-6
  error handling
    and logical standby databases, 4-13
  filters
    and logical standby databases, 4-13
standby databases
  choosing a target standby database, 5-2
  constructing from backups, 3-8, 6-2
  creating, 1-8
    if primary database uses ASM or OMF, 2-2
  Data Guard configuration, 3-1
  health check, 4-26
  not involved in a switchover, 5-6
  reenabling after failover, 5-10
  removing, 4-22, 7-43
  require standby redo log files, 4-18
  shutting down when fast-start failover is enabled, 5-37
  specifying the location of archived redo logs, 4-9
  switching over to the primary role, 7-61
standby redo log files
  setting up, 4-18
  setting up with DGMGRL, 4-18
StandbyArchiveLocation property, 8-38
  setting log apply services, 4-9
StandbyFileManagement property, 8-39
START OBSERVER command
  fast-start failover configuration file (fsfo.dat), 5-35
starting
  Data Guard command-line interface (DGMGRL), 6-2, 7-1
  Data Guard monitor (DMON), 3-7
  manual failover, 5-8
  Oracle instance, 7-58
  switchover, 5-5
STARTUP command, 7-58
state transitions
  effect on database states, 4-3
  logical standby database, 4-4
  physical standby database, 4-3
  primary database, 4-3
states, 3-10
  changing, 6-11
  database, 4-1
  database transitions, 4-3
  logical standby database
    APPLY-OFF, 4-2
    APPLY-ON, 4-2
  physical standby database
    APPLY-OFF, 4-2
    APPLY-ON, 4-2
  primary database
    TRANSPORT-OFF, 4-2
    TRANSPORT-ON, 4-2
StaticConnectIdentifier property, 8-39
status
  configuration, 3-11
  health check on primary database, 4-26
  health check on standby database, 4-26
  health of the database, 4-25
  intended state of a configuration, 3-11
status messages
  ORA-16661, 5-11
  ORA-16795, 5-11
string values
  Data Guard command-line interface, 7-4
supported broker configuration, 1-6
SWITCHOVER command, 6-15, 7-61
switchovers
  benefits, 1-5
  broker tasks, 5-5
  choosing a target standby database, 5-2
  DGMGRL SWITCHOVER command, 6-15

effect on
database startup, 7-61
primary database, 5-6
protection modes, 4-20
standby databases not involved in the switchover, 5-6
managing, 5-1, 5-3
overview, 5-1
Oracle Enterprise Manager, 1-8
performing when fast-start failover is enabled, 5-24
preparing the primary database, 5-4
prerequisites, 5-4
reenabling disabled standby databases, 5-11
starting, 5-5
transitioning
a logical standby database to the primary role, 5-4
a physical standby database to the primary role, 5-3
using the DGMGRL SWITCHOVER command, 7-61
SYNC redo transport mode, 4-8
SYSDBA privileges, 6-2
to connect to the database, 7-4

T

target standby database
choosing, 5-2
disabling fast-start failover on, 5-29
setting with the FastStartFailoverTarget property, 5-16, 6-9
TopWaitEvents property, 8-12
transaction commit order
controlling, 4-13
TRANSPORT-OFF state
LogShipping property setting, 8-24
TRANSPORT-ON state
setting LogShipping property, 8-24
troubleshooting
Data Guard, 9-1
diagnostics logged in broker drc* log files, 9-1
tuning
redo transport services, 4-10
two-way communication channel, 1-10

U

unobserved configuration, 5-34
updating configuration properties, 4-4
upgrading
Data Guard, B-1, B-2
Oracle Enterprise Manager, B-1
protection mode, 4-20
user interfaces
overview, 1-8

V

V$DATABASE view
fast-start failover columns, 5-23, 5-26
FS_FAILOVER_OBSERVER_HOST column, 5-33
FS_FAILOVER_OBSERVER_PRESENT column, 5-33
when shutting down databases, 5-37
verifying
fast-start failover environment, 5-20
viewing
fast-start failover statistics, 5-26
V$FS_FAILOVER_STATS view, 5-28
verifying
fast-start failover environment, 5-20
viewing
property information about databases, 4-6, 8-6

W

warning status, 3-11
wizards
Add Standby Database, 1-8